EN

PIUSI

MADE IN ITALY

FUEL CATALOGUE

FUEL PRODUCT RANGE

PRODUCT RANGE	PRODUCT CATEGORY		PRODUCT	PAG
FUEL MANAGEMENT SYSTEM	FUEL MANAGEMENT SYSTEM		OVERVIEW	8
	B.SMART – SOFTWARE		B.SMART	10
			ADD-ONS	12
	B.SMART – DISPENSER		CUBE B.SMART	14
			SELF SERVICE B.SMART	16
	B.SMART – CONTROL BOX		MCBOX B.SMART	18
	SSM 2.0 – SOFTWARE		SSM2.0	20
			DATA TRANSFER SSM 2.0	22
	SSM 2.0 – DISPENSER		CUBE MC 2.0	24
			SELF SERVICE MC 2.0	26
			SELF SERVICE FM 2.0	28
	SSM 2.0 – CONTROL BOX		MCBOX 2.0	30
	AGILIS SELFSERVICE MANAGEMENT – SOFTWARE		SSM AGILIS	32
			DATA TRANSFER SSM AGILIS	34
	AGILIS SELFSERVICE MANAGEMENT – DISPENSER		CUBE MC	36
			SELF SERVICE MC	38
	AGILIS SELFSERVICE MANAGEMENT – CONTROL BOX		MCBOX	40
DISPENSERS	MEHCANICAL DISPENSER		CUBE	46
			SELF SERVICE K44	48
KITS	ATEX KITS		EX50 DRUM	54
			EX100 DRUM	56
			EX140 DRUM	58
			EX50 ST	60
	DRUM		DRUM	62
			PICO	64
	MOBILE		BATTERY KIT	66
			PITSTOP	68
			PIUSIBOX	70
			CARRY	72
	ST		ST	74
			ST WITH METER	76
			ST WITH METER AND FILTER	78
			ST BOX	80
			ST 200 AC	82
			ST 200 DC	84
PUMPS	ATEX AC PUMPS		EX50 AC	90
			EX100	92
			EX140	94
	ATEX DC PUMPS		EX50 / EX75 DC	96
			EXGO!	98
	AC PUMPS		PANTHER AC	100
			VISCOMAT VANE	102
			E80 / E120	104
			E140	106
			E300	108
	NEW! OVERVEW PIUSI SUPREME DC PUMPS		PIUSI SUPREME SOFTWARE	110
			PIUSI 3000 SUPREME	112
			BP3000	114
			PANTHER DC	116
			BIPUMP	118
	HAND PUMPS		PIUSI HAND PUMP	120
			HAND PUMPS	122

All Pictures shown are for illustration purpose only. Actual product may vary due to product enhancement.

PIUSI

PRODUCT RANGE	PRODUCT CATEGORY	PRODUCT	PAG
METERS	ATEX ELECTRONIC METERS (Ex)	K24 ATEX (Ex)	128
	ATEXMECHANICAL METERS (Ex)	K33 ATEX (Ex)	130
		K150 ATEX (Ex)	132
	ELECTRONIC METERS	K24	134
		K600/3	136
		K600 B/3	138
		K600/4	140
		K700 PULSER	142
		K900	144
		REMOTE DISPLAY	146
	MECHANICAL METERS	K33 / K44	148
		K150	150
		K700	152
NOZZLES	ATEX AUTOMATIC NOZZLES (Ex)	A60 / A140 ATEX (Ex)	158
	AUTOMATIC NOZZLES	A60 / A80 / A120 / A140	160
		A280	162
	MANUAL NOZZLES	SELF 2000 / SELF 3000	164
FILTRATION	FILTERING SYSTEM	FILTROLL	170
	FILTERS	WATER CAPTOR	172
		CLEAR CAPTOR	174
		FUEL & BIOFUEL	176
		FOOT VALVE	178
TANK MONITORING	TANK LEVEL INDICATORS	OCIO	182
		OCIO 2.0	184
HOSE REEL	OPEN HOSE REEL	DIESEL HOSE REEL	190
ACCESSORIES	ACCESS CONTROL	ACCESS 85	196
	ACCESSORIES	CONNECTORS	198
		COUPLING&FITTINGS	200
		FLANGED CONNECTIONS	202
		HOSE&SWIVEL	204
MERCHANDISE	MERCHANDISE		210

FUEL

PIUSI'S

FUEL JOURNEY
THE HISTORY OF "KNOW-HOW"

ABOUT US

PIUSI was established in 1953 in Suzzara, in the province of Mantua (Italy). For more than 60 years, **PIUSI has been the major player in the world's leading markets with its full range of products for transferring, refilling and measuring lubricants, fuels and liquids such as gasoline, diesel, Diesel Exhaust Fluid (DEF), oil, water and grease**.
Some of PIUSI's main products include pumps, flow meters, nozzles, dispensers, hose reels, liquid level gauges, software and complete kits used by operators in agriculture, the automotive industry, workshops and garages, fleet management and transport by road and by sea. PIUSI products have many different uses such as monitoring and transferring fuel at trucking companies, refueling of agricultural vehicles, transferring fuels in construction and mining for heavy duty vehicles. The products are intuitive and easy to use; are suitable to be installed in a variety of contexts; are all made entirely in Italy; and all products express the innovation, quality, professionalism and R&D that have always distinguished PIUSI. Its headquarters are in Suzzara (Mantova - 150 km from Milan and Venice). The company currently employs more than 250 employees between sales, administration, R&D, production and logistics. PIUSI products are sold in more than 120 countries around the world thanks to a large network of distributors and the US branch based in Fort Lauderdale, FL, serving the North and South American markets.

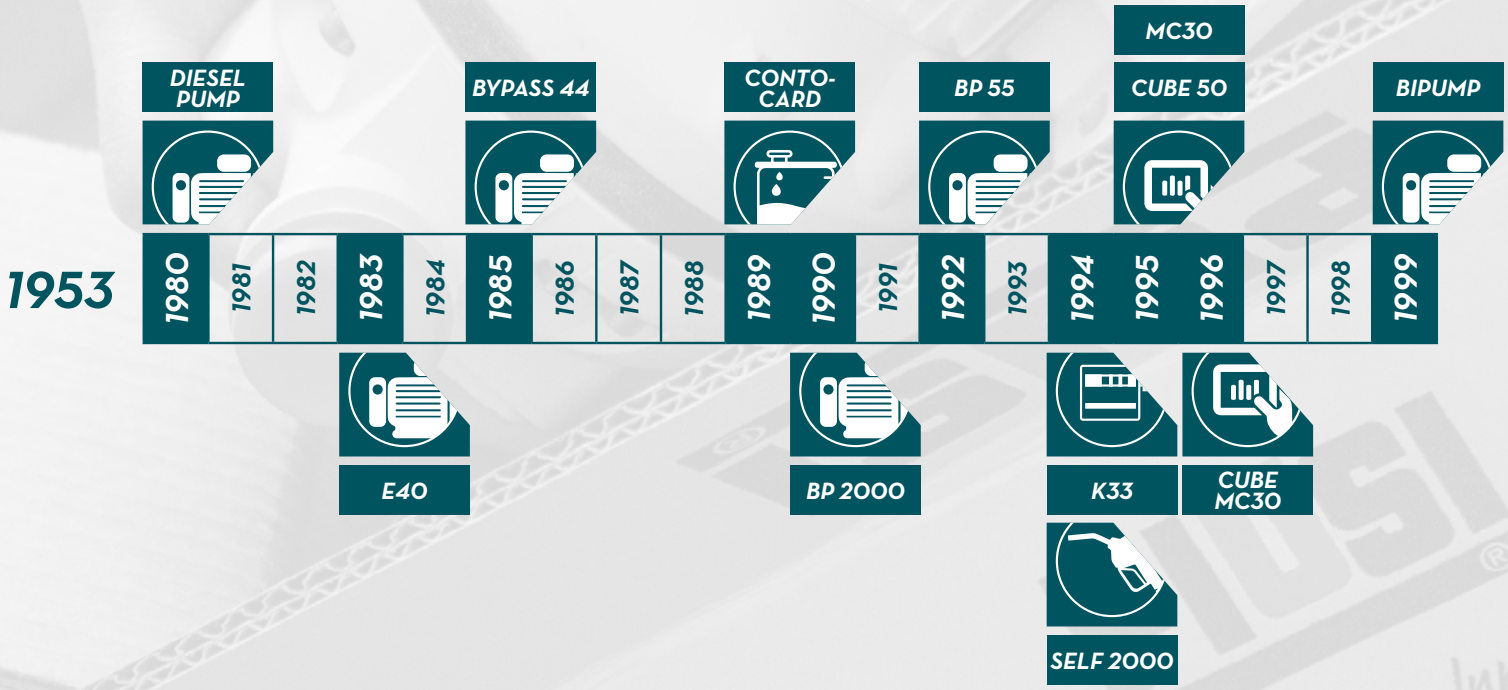

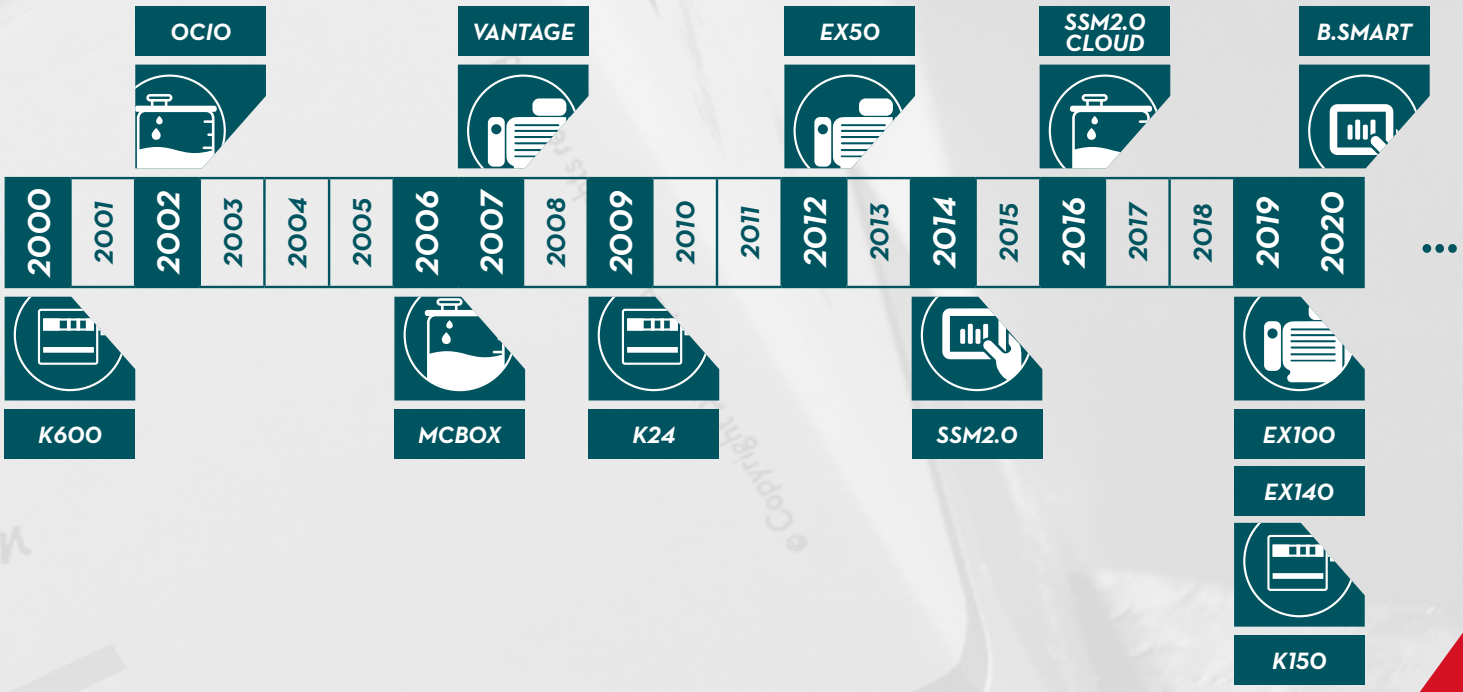
OCIO
VANTAGE
EX50
SSM2.0 CLOUD
B.SMART
2000
2001
2002
2003
2004
2005
2006
2007
2008
2009
2010
2011
2012
2013
2014
2015
2016
2017
2018
2019
2020
...
K600
MCBOX
K24
SSM2.0
EX100
EX140
K150

FUEL MANAGEMENT SYSTEMS

OVERVIEW

FEATURES:

ACCURATE DATA

• REAL AND ACCURATE CONSUMPTIONS' DATA ON EACH REFUELLING OPERATION MANAGED AUTOMATICALLY BY THE SYSTEM;

• OVERVIEW ON CONSUMPTIONS' TREND AND AVAILABLE RESIDUAL FUEL;

REDUCED COSTS

• CAREFUL AND MEASURED CONSUMPTION OF FUEL ALLOWS TO SAVE UP TO 10% OF FUEL EVERY YEAR

NO ABUSE

• A FUEL MANAGEMENT SYSTEM ALLOWS YOU TO TRACK WHO IS MAKING THE PROCEDURE, ON WHICH VEHICLE ALSO INDICATING THE DISPENSER USED IN ORDER TO CONTAIN ABUSES.

Fuel Management Systems (FMS) are technologically-advanced equipment that allow to **measure, control and manage the consumptions of fuel** (or other fluids) **of fleets or other Company vehicles** (such as for example the earth moving machines within the construction industry).

The **consumption** of fuel, diesel and petrol **is an important** part of the running **costs** of a fleet.

How much fuel have you wasted in the past few months?
How much fuel does each vehicle or driver consume?
What was the trend of consumptions?

To have a **clear and precise overview** on the situation, **you need a FMS**.

A system linked to your dispensers and stations for fuel transferring that follow and trace all the refuelling operations also indicating who is the operator and the vehicle which is refuelled; all in real time.

PIUSI has developed 3 different FMS software suitable for all different requirements: **B.SMART, SSM 2.0 and SELF SERVICE MANAGEMENT AGILIS.**

AGILIS SELFSERVICE MANAGEMENT

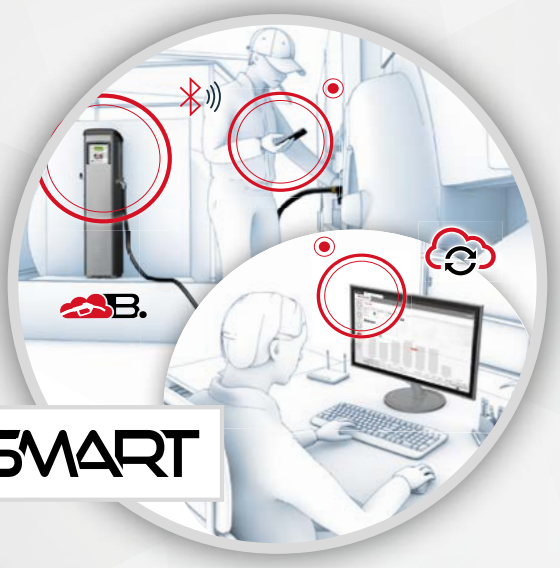

B.SMART

SSM 2.0 SELF SERVICE MANAGEMENT

Why choose a PIUSI FMS?

With **70 years of history**, PIUSI can supply not only all the technological and IT aspects of the software, but also – integrated – a wide range of dispensers suitable for all needs.

By choosing PIUSI, **you will have** – from a single supplier – **not only the Software, but also the dispensing Hardware** directly **from the same Company.**

		AGILIS SELFSERVICE MANAGEMENT	SSM 2.0 SELF SERVICE MANAGEMENT	B.SMART
		Dispensing control ideal for: company that wants to monitor the quantity delivered.	**Consumption control ideal for:** a company that wants to monitor and manage the quantities supplied, manage consumption and supply of fuels.	**Dispensing control ideal for:** company that wants to monitor and manage the quantities delivered in the cloud without territorial limitations, with smart technologies.
GENERAL	PLATFORM	PC Software	PC Software	Cloud Software
	MULTISITE	-	with PW mobile	YES
	MAX USERS	250/Dispenser	up to 1000	Unlimited
	MAX DISPENSERS	16	up to 20	Unlimited
	USER LOGIN	iButton/Pincode	iButton/Pincode	Mobile App
LIMIT SETTINGS	REMOTE USER/DISPENSER DEACTIVATION	-	YES	YES
	USER DAY/WEEKLY LIMITS	-	YES	with Fuel Economy Add-on
	VEHICLE LIMITS	-	YES	with Fuel Economy Add-on
MANAGEMENT: • VEHICLES • SUPPLIERS • CONSUMPTIONS	REGISTRATION NUMBER	Manual entry	iButton	Mobile App
	USER VEHICLE ASSIGNMENT	-	YES	YES
	ODOMETER	YES	YES	YES
	EXTERNAL TRANSACTIONS	-	YES	with Fuel Economy Add-on
	FUEL CONSUMPTION MANAGEMENT	-	YES	with Fuel Economy Add-on
	ADBLUE CONSUMPTION MANAGEMENT	-	YES	with Fuel Economy Add-on
	FLUID SUPPLIERS MANAGEMENT	-	YES	with Tank Watchdog Add-on
TANK LEVEL MANAGEMENT	TANK LOW LEVEL PUMP CUT-OFF	YES	YES	YES
	REMOTE TANK LEVEL MANAGEMENT	-	YES	with Tank Watchdog Add-on
	MAX NO. OCIO	-	up to 20	Unlimited - with Tank Watchdog Add-on
TANK ALARM	SOFTWARE ALARMS	YES	YES	YES
	HARDWARE ALARMS (W/OCIO)	-	YES	YES
REPORT	TRANSACTION REPORT	YES	YES	YES
	TANK LEVEL REPORT	-	YES	with Tank Watchdog Add-on
	FUEL PRICE TREND REPORT	-	YES	with Tank Watchdog Add-on

IBUTTON: IN CASE OF EMERGENCY IF/OR SMARTPHONE IS ABSENT OR IT DOESN'T WORK

B.SMART

FEATURES

- SIMPLE, INTUITIVE, SUITABLE FOR EVERYONE
- UNLIMITED TO FIT ALL NEED
- MONO OR MULTI-SITE
- SOFTWARE ALWAYS INCLUDED WITH THE DISPENSER
- BLUETOOTH
- CLOUD-BASED
- NO SOFTWARE INSTALLATION
- NO FEE
- ANALYSIS, CONTROL AND MANAGEMENT IN ONE CLICK

B.SMART is the Fuel Management System (FMS) by PIUSI designed and engineered for fleets of all sizes: small, medium, large, mono or multi-site. Innovative, simple and smart - the name carries its meaning – PIUSI B.SMART combines the quality and efficiency of PIUSI dispensers, with a Cloud-based software (APP for drivers and a web APP for fleet managers) driven by Bluetooth technology; that means no Wi-Fi or LAN network are required. Thus, it is possible to use B.SMART wherever; also in the more distant areas.
A FMS all in one: the fleet manager has just to choose the necessary dispensers; the software is always included in the "package" (no rental ore recurring fee will be required).

PERFORMANCE

DATA AVAILABLE ALWAYS TRANSACTIONS	NO SOFTWARE ON THE PC CLOUD
NO FEE UTILIZATION	BLUETOOTH NO WI-FI OR LAN CONNECTION

B.SMART

B.SMART is flexible and expandable: the same system easily fits to all requirements. It is only necessary to add the add-on needed to keep up with the evolution of the fleet.

B.SMART API AVAILABLE

CONNECT YOUR ERP TO B.SMART WITH THE INTEGRATED API INTERFACE.

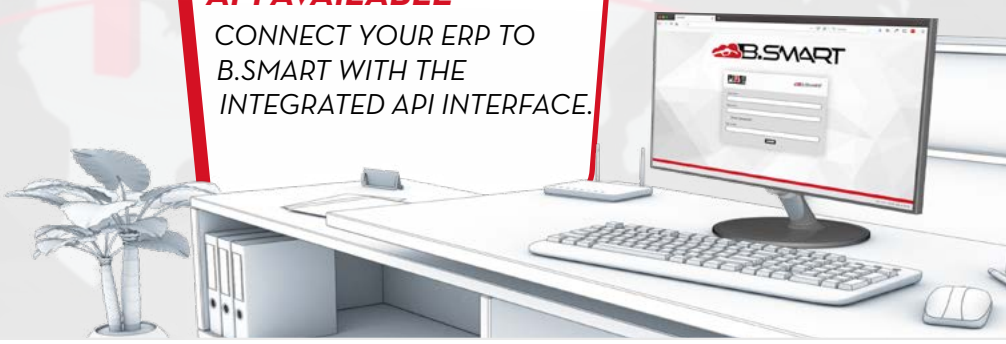

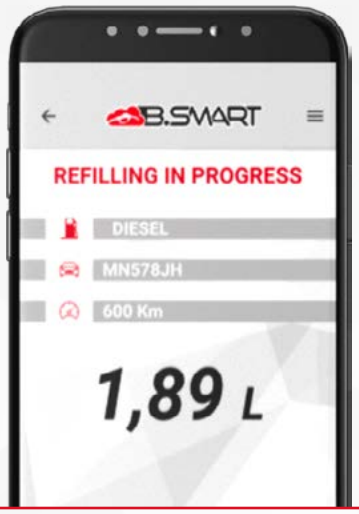

APP

Dedicated to drivers, the APP for drivers just needs a smart device with Bluetooth to work properly: once the APP is open, the smartphone or tablet immediately connects to the dispenser to start the refueling operation.

HARDWARE

PIUSI B.SMART runs only with the dedicated range of dispensing devices: quality guaranteed by PIUSI; the highest technical performances and reliability, all form a unique supplier. Real time communication between the dispenser and the PC.

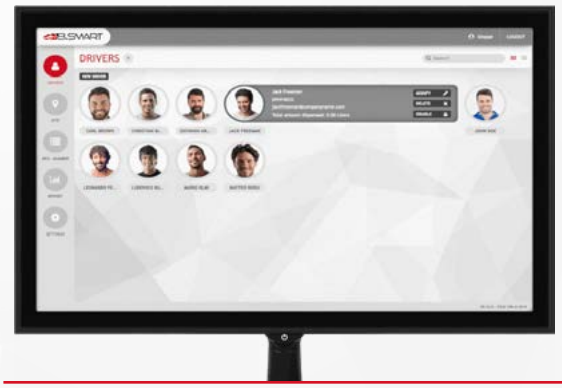

CLOUD

The core of B.SMART fuel management software is a Cloud-based service that tracks every refuelling operation and keeps every device synchronized.

WEB APP

Dedicated to fleet manager. No software installation: just log in and start immediately to monitor, manage and control consumptions of the fleet.

ADD-ONS

FEATURES

- *EXPANDABLE WITH DEDICATED ADD-ON*
- *UNLIMITED DRIVERS*
- *DETAILED INFO FOR EACH DRIVER*
- *SUITABLE FOR ALL NEED*
- *MONITORING AND MANAGEMENT OF THE TANKS*
- *MANAGE LIMITS AND VEHICLE CONSUMPTIONS*

PIUSI B.SMART is an expandable system that quickly adapts to the new needs thanks to software-activated addons. A smart FMS that grows with the business. With the ADD-ON packages it is possible to purchase drivers accesses (licenses) (10 or 50) or the special function TANK WATCHDOG or FUEL ECONOMY to have always under control the level of the fluid in the tank or manage consumptions. You can also upgrade your MC version to B.SMART with the dedicated KIT UPGRADE 1.0/2018.

ADD-ON

Once the ADD-ON is chosen, PIUSI will send an activation code with all related instructions.

DRIVER ADD-ON	
CODE	DESCRIPTION
F22500000	DRIVER ACCESS ADD-ON B.SMART (X10)
F00770D20	DRIVER ACCESS ADD-ON B.SMART (X50)

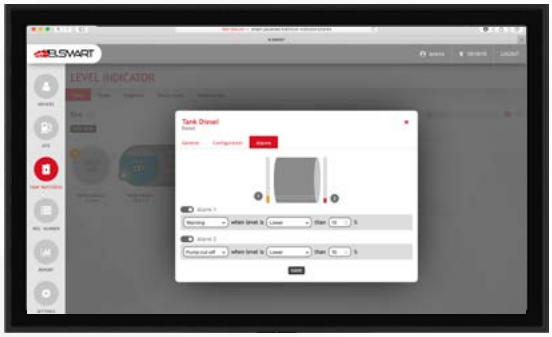

TANK WATCHDOG

B.SMART Tank Watchdog is the perfect add on for a complete and updated control of the stock. It allows you to:

- monitor the tank level (add fluid loads and unloads and adjustments);
- set level alarms;
- manage suppliers;
- follow inventory price values and trends;
- access and download reports from anywhere.

TANK WATCHDOG - tank levels

Adding the level indicator OCIO, the system allows you to monitor the fluid level in your tanks in real time and gives alarms in case of malfunction or low levels. A perfect add-on for a complete and updated control of the stock. You can connect also any 420 mA o 0-10 V fluid gauge or run the system without any gauge thanks to the “virtual tank” option:

- set level alarms and get notifications on the tank level;
- possibility to configure high level or low level alarms;
- stop the pump according to the level of the fluid;
- send an automatic e-mail to notify when you reach the level alarm set.

TANK WATCHDOG - fluid price and values

Thank to the level indicator OCIO you can have at your fingertips the fluid inventory value & quantity: you can define the refuelling price and verify the current inventory value.

- manage suppliers of the fluids to keep track of the date, price and quantity bought;
- get real time data of the value of your inventory;
- follow fluids price trends;
- access and download reports from any internet connected device thanks to the software cloud.

TANK WATCHDOG ADD-ON	
CODE	DESCRIPTION
F00770L00	B.SMART TANK WATCHDOG ADD-ON - 1 YEAR
F00770L10	B.SMART TANK WATCHDOG ADD-ON - 3 YEARS
F00770L20	B.SMART TANK WATCHDOG ADD-ON - ONE TIME FEE

FUEL ECONOMY

Enhance your system and become even more smart with the FUEL ECONOMY ADD-ON for B.SMART! Thanks to this new module, you can now completely manage and increase the profitability of your fleet:

- Integrated fleet management;
- Manage consumptions, cross-checking vehicles and drivers;
- Manage drivers' and vehicles' limits;
- Add, check and manage the on-road refuellings.

FUEL ECONOMY - fleet management & limits

Thanks to this new add-on, you can:

- Add to the B.SMART WEB APP system all the vehicles of your fleet;
- Group all the vehicles according to a specific and personalized setting;
- Add to the WEB APP the images of your vehicles and drivers for a quickest and easy identification;
- Set drivers and vehicles limits based on quantities or time frames.

FUEL ECONOMY - consumptions report

Thanks to this new add-on, you can have detailed reports of:

- Fuel/AdBlue® dispenses;
- Vehicles' consumptions, spotting deviations vs standard;
- Drivers' consumption on vehicles, tracking the driving behaviour of the operator;
- Spot drivers' high fuel consumption;
- Add on-road transactions highlighting also fuel/AdBlue® costs and the service station used in order to have a complete overview on the trend/activities of both drivers and vehicles.

FUEL ECONOMY ADD-ON	
CODE	DESCRIPTION
F00770F00	B.SMART FUEL ECONOMY ADD-ON 1 YEAR
F00770F10	B.SMART FUEL ECONOMY ADD-ON 3 YEARS
F00770F20	B.SMART FUEL ECONOMY ADD-ON ONE TIME FEE
F17299Q00	B.SMART FUEL ECONOMY 45 QR CODES

CUBE B.SMART

FEATURES

- STURDY STRUCTURE
- COMPACT DESIGN
- NATIVE WITH B.SMART CLOUD SOFTWARE
- KIT UPGRADE 1.0/2018 AVAILABLE
- IP55

The CUBE B.SMART fuel dispenser, available in the 70 and 90 litre/min versions with both AC and DC supply, is equipped with a self-priming vane pump with built-in bypass that ensures high performance. The anti-vibration support of the diesel dispenser guarantees silent operation and practicality, while the mechanical seal and the thermal protection of the induction motor against overheating make the product reliable and safe. CUBE B.SMART is equipped with an automatic nozzle with swivel connection. The installation of the mesh filter on the suction side ensures the pump longevity, as it prevents foreign bodies from ending up in the rotor and causing a blockage and consequent damage.

PERFORMANCE

UP TO 90 L/MIN FLOW RATE	AC/DC VOLTAGE POWER
± 0,5% ACCURACY	BLUETOOTH CONNECTION

Upgrade your MC hardware to B.SMART with KIT UPGRADE 1.0/2018.

CUBE B.SMART

PACKAGING

CODE	WEIGHT		PACKAGING			N. BOXES / EUROPALLET	
	KG	LBS	MM	INCH	PCS/BOX	✈	🚢
AC VERSION							
F00598000	24	53	380X380X480	15,0X15,0X18,9	1	-	-
F00598010	24	54	380X380X480	15,0X15,0X18,9	1	-	-
DC VERSION							
F00598A00	23	50	380X380X480	15,0X15,0X18,9	1	-	-
F00598A10	23	50	380X380X480	15,0X15,0X18,9	1	-	-

CHART

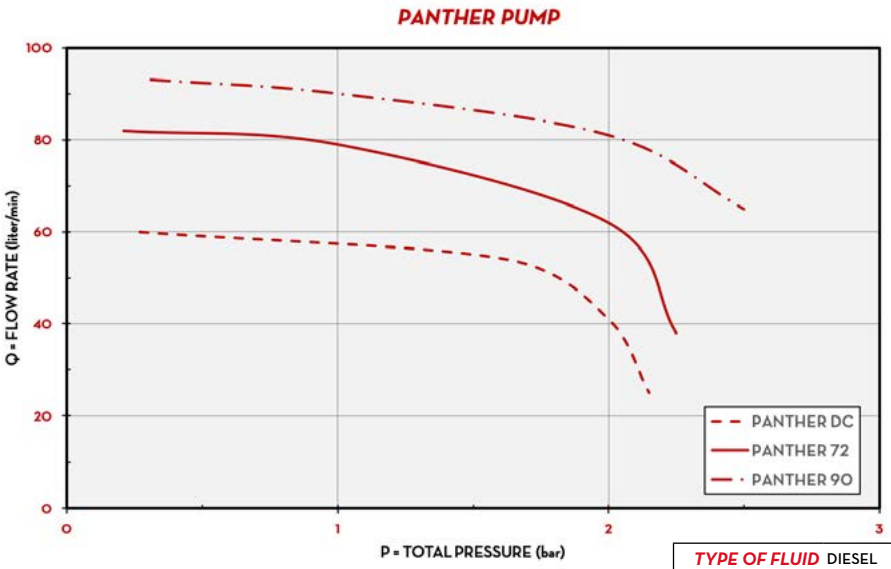

TYPE OF FLUID	DIESEL
TEMPERATURE	20°C

IN THE BOX

- CUBE B.SMART DISPENSER
- AUTOMATIC NOZZLE
- DELIVERY HOSE
- DRIVER ACCESS ADD-ON
- INSTRUCTION MANUAL

DETAILS

SHUTTER

B.SMART MOBILE APP

B.SMART CLOUD SOFTWARE

DIMENSIONS

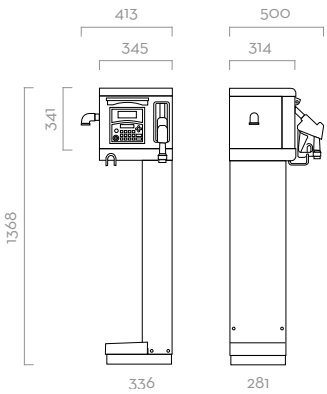

Dimensions expressed in millimeters

MATERIALS

- PUMPS:
  - PANTHER AC — PAG. 100
  - PANTHER DC — PAG. 116
- METER:
  - K600/3 — PAG. 136
- NOZZLE:
  - AUTOMATIC NOZZLE — PAG. 160

TECHNICAL DATA

CODE	DESCRIPTION	FLUIDS TYPE	FLOW RATE		VOLTAGE				PUMP	METER	NOZZLE	FILTER	INLET	HOSE	
			L/MIN	GPM	AC V./HZ DC VOLT		POWER WATT	AMP. MAX.	TYPE	TYPE	TYPE	H2O FILTER	BSP	LENGTH	Ø
AC VERSION															
F00598000	CUBE 70 230V B.SMART 10 DIVERS	D	70	18	230 V	50 HZ	900 W	4,2 A	PANTHER 72	K600/3	A60	NO	1"	4M	25MM
F00598010	CUBE 90 230V B.SMART 10 DIVERS	D	90	24	230 V	50 HZ	900 W	4,9 A	PANTHER 90	K600/3	A120	NO	1"	4M	25MM
DC VERSION		D													
F00598A00	CUBE 12 V B.SMART • 10 DRIVERS	D	56	15	12 V	-	300	35	PANTHER DC	K600/3	A60	NO	1"	4M	25MM
F00598A10	CUBE 24 V B.SMART • 10 DRIVERS	D	70	18	24 V	-	420	25	PANTHER DC	K600/3	A60	NO	1"	4M	25MM

CUBE B.SMART

SELF SERVICE B.SMART

FEATURES

- FUEL MANAGEMENT SYSTEM B.SMART INTEGRATED
- NO SOFTWARE INSTALLATION REQUIRED
- SUITABLE FOR FLEETS OF ALL SIZES
- REAL TIME FEEDBACK FROM ANYWHERE
- BUILT-IN FILTER
- ALL-IN-ONE EQUIPMENT
- COMPACT DESIGN
- KIT UPGRADE 1.0/2018 AVAILABLE

Top quality diesel dispenser by PIUSI, combined with the innovative B.SMART fuel management system: this is the core of the new SELF SERVICE B.SMART.
A complete device specifically engineered to fit all diesel transfer needs while performing all the features of a fuel management software in terms of monitoring, controlling and managing the consumption of fuel by the fleet.
This dispenser performs: a sturdy design to ensure proper function in any working condition, a vane pump with incorporated bypass for a high flow rate (up to 90 l/min) and an oval gear meter to ensure maximum precision in measurement. An automatic nozzle with swivel connection, ergonomic and easy to handle, and a water absorption filter completes its components.

PERFORMANCE

UP TO 90 L/MIN FLOW RATE	AC VOLTAGE POWER
± 0,5% ACCURACY	BLUETOOTH CONNECTION

Upgrade your MC hardware to B.SMART with KIT UPGRADE 1.0/2018.

SELF SERVICE B.SMART

PACKAGING

CODE	WEIGHT		PACKAGING			N. BOXES / EUROPALLET	
	KG	LBS	MM	INCH	PCS/BOX	✈	🚢
F00748010	57	125	1480X490X400	58,3X19,3X15,7	1	-	-
F00748000	61	133	1480X490X400	58,3X19,3X15,7	1	-	-

CHART

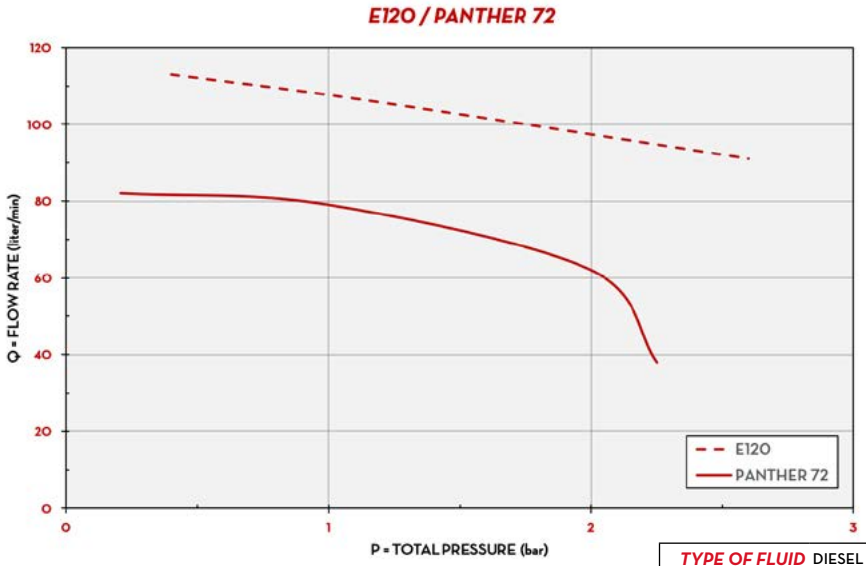

TYPE OF FLUID	DIESEL
TEMPERATURE	20°C

IN THE BOX

- SELF SERVICE B.SMART DISPENSER
- DELIVERY HOSE
- AUTOMATIC NOZZLE
- DRIVER ACCESS ADD-ON
- INSTRUCTION MANUAL

DETAILS

SHUTTER

B.SMART MOBILE APP

B.SMART CLOUD SOFTWARE

WATER CAPTOR FILTER

DIMENSIONS

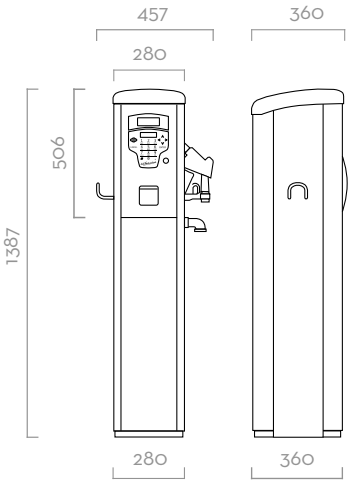

Dimensions expressed in millimeters

MATERIALS

- PUMPS:
  PANTHER 72 / E120 — PAG. 100/104
- METER:
  K600/3 — PAG. 136
- NOZZLE:
  AUTOMATIC NOZZLE — PAG. 160
- FILTER:
  WATER CAPTOR — PAG. 172

TECHNICAL DATA

CODE	DESCRIPTION	FLUIDS TYPE	FLOW RATE		VOLTAGE				PUMP	METER	NOZZLE	FILTER	INLET	HOSE	
			L/MIN	GPM	AC V./HZ DC VOLT		POWER WATT	AMP. MAX.	TYPE	TYPE	TYPE	H2O FILTER	BSP	LENGTH	Ø
F00748010	SELF SERVICE 70 230V B.SMART 10 DRIVERS	D	70	18	230 V	50 HZ	550 W	3,3 A	PANTHER 72	K600/3	A80	30 µM	1 1/2"	4M	25MM
F00748000	SELF SERVICE 100 230V B.SMART 10 DRIVERS	D	90	24	230 V	50 HZ	1150 W	5,7 A	E120	K600/3	A120	30 µM	1 1/2"	4M	25MM

SELF SERVICE B.SMART

MCBOX B.SMART

FEATURES

- IDEALS FOR EXISTING PLANTS
- SUITABLE FOR ANY PUMPS
- PULSE METER INPUT
- NATIVE WITH B.SMART CLOUD SOFTWARE

MCBOX is an electronic control panel that allows you to control any type of AC/DC pump, pulser litre-counter, nozzle and fuel level switches. The perfect product to upgrade an existing installation or for a customized assembly.
With MC BOX B.SMART the B.SMART fuel management system is integrated.
No need for software to be installed on a PC: B.SMART works in the Cloud and allows you to monitor all fuel transactions in real time, from any site where MCBOX B.SMART is installed. Communication between MCBOX B.SMART, Phone App and Cloud Software is simple.

PERFORMANCE

AC/DC VOLTAGE POWER	UP TO 500 STORABLE TRANSACTIONS
2 PUMPS VERSION OUTPUT	BLUETOOTH CONNECTION

MC BOX B.SMART

PACKAGING

CODE	WEIGHT		PACKAGING			N. BOXES / EUROPALLET	
	KG	LBS	MM	INCH	PCS/BOX	✈	🚢
AC VERSIONS							
F00599000	5,2	11,5	300X300X180	11.8X11.8X7.1	1	-	-
F00599200	5,3	11,6	300X300X180	11.8X11.8X7.1	1	-	-
DC VERSIONS							
F00599010	5,4	11,8	300X300X180	11.8X11.8X7.1	1	-	-
F00599060	5,4	11,8	300X300X180	11.8X11.8X7.1	1	-	-

ANY BIODIESEL | AIR | ANTIFREEZE | AdBlue® | BIODIESEL | DIESEL | FOOD | GASOLINE | GREASE | KEROSENE | OIL | WATER | WINDSCREEN

CONNECTION SCHEME

IN THE BOX

- MCBOX B.SMART UNIT
- DRIVER ACCESS ADD-ON
- INSTRUCTION MANUAL

DETAILS

SHUTTER

B.SMART MOBILE APP

B.SMART CLOUD SOFTWARE

EASY ACCESS TO CONNECTION

DIMENSIONS

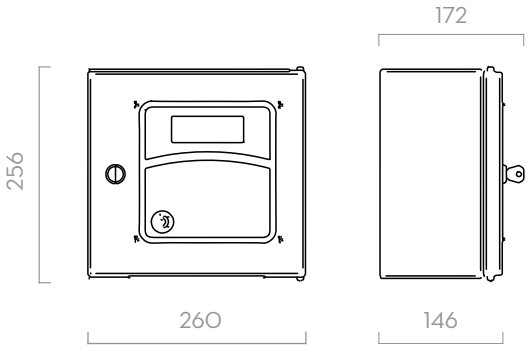

Dimensions expressed in millimeters

TECHNICAL DATA

CODE	DESCRIPTION	FLUIDS TYPE	VOLTAGE				B.SMART CLOUD
			AC V./HZ DC VOLT		POWER WATT	AMP. MAX.	
AC VERSIONS							
F00599000	MCBOX 100-240V B.SMART 10 DRIVERS	ANY	100V-240V	50/60 HZ	5W	15 A	INCLUDED
F00599200	MCBOX 100-240V B.SMART 10 DRIVERS 2 PUMPS	ANY	100V-240V	50/60 HZ	5W	15 A	INCLUDED
DC VERSIONS							
F00599010	MCBOX 12V B.SMART 10 DRIVERS	ANY	12 V	-	5W	50 A	INCLUDED
F00599060	MCBOX 24V B.SMART 10 DRIVERS	ANY	24 V	-	5W	25 A	INCLUDED

MCBOX B.SMART

SSM2.0

FEATURES

- TANK WATCHDOG
- DRIVERS/VEHICLES MANAGEMENT
- REPORT
- FLUID INVENTORY VALUE

The new SELF SERVICE MANAGEMENT 2.0 software is the most advanced response for management and monitoring of refueling, allowing supervision of drivers, vehicles and fuel tanks. Setting up the system and getting to work has never been easier: simply connect the devices to your LAN or Wi-Fi network and click on the "Detect System" button on your PC. SELF SERVICE MANAGEMENT 2.0 will handle the rest. Use of the SELF SERVICE MANAGEMENT 2.0 software requires the new range of SELF SERVICE 2.0 dispensing devices. The ibutton key reader kit is available on request.

PERFORMANCE

UP TO
1000
DIVERS / VEHICLES

USB/WEB
SOFTWARE VERSION
INSTALLATION

SOFTWARE ACTIVATION MODE

USB HARDWARE KEY
without internet connection

WEB EDITION
internet connection required

CHECK

The cost of the consumption for every distance.

VIEW

Bar charts easily allow you to analyze the liters delivered each day and compare them with the average use.

The system min. requirements are:

- Monitor resolution 1280x700
- CPU: Intel® Pentium® 4 or AMD Athlon® 64 processor (2 GHz or higher)
- RAM: 2 GB
- Free space on Hard Disk: 20 GB
- Operating system: Windows 10 TH1 1507 or next version, Windows Server 2016 or next version
- Database: Microsoft SQL 2019 CU16 Express (included in the installation)

VEHICLES

Reads the average consumption and distance driven.

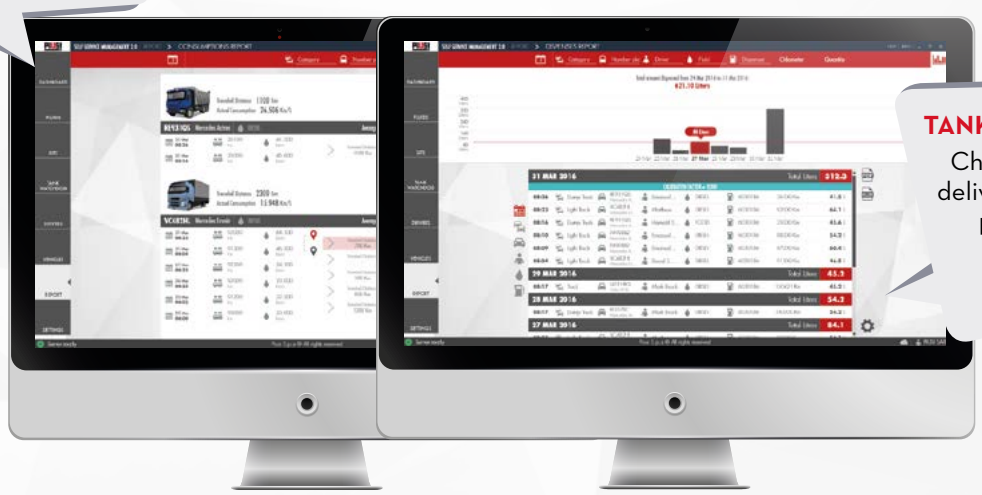

TANK MONITORING

Check the liters delivered over the period you specify.

TECHNICAL DATA - USB CODE

CODE	DESCRIPTION
F00772050	SSM 2.0 ENTRY
F0077202A	SSM 2.0 ADVANCED
F0077204A	SSM 2.0 SUITE
F00772000	SSM 2.0 CLIENT

TECHNICAL DATA - WEB CODE

CODE	DESCRIPTION
F00772250	SSM 2.0 ENTRY - WEB EDITION
F0077222A	SSM 2.0 ADVANCED - WEB EDITION
F0077224A	SSM 2.0 SUITE - WEB EDITION
F00772200	SSM 2.0 CLIENT - WEB EDITION

THE PURCHASE OF ADDITIONAL CLIENT LICENSES ENABLES YOU TO USE THE VARIOUS VERSIONS OF SELF SERVICE MANAGEMENT 2.0 ON MULTIPLE WORKSTATIONS.

SSM2.0

DATA TRANSFER SSM2.0

Among the equipment related to SSM 2.0, PIUSI has developed a set of technological solutions able to connect the electronic/mechanical device to the fluid control system, that is the software that organizes the operation of the hardware; in this case SELF SERVICE MANAGEMENT 2.0. How does data transfer with SSM2.0 work? It depends on the technology required.

Direct downloading
Use your Manager Key to transfer the data from dispenser to PC: it is enough to touch the dispenser with the key and then use the key reader to transfer the data collected.

LAN/Wi-Fi
The way to receive in real time all information regarding the transactions: using PWLAN or PW WiFi the software recognizes the fuel dispensers and it will automatically send the data to the SELF SERVICE MANAGEMENT 2.0 software.

Mobile Network
The brand-new PW MOBILE 4G 2.0 allows to install dispenser wherever desired, even in the most remote area, without the need of a local network: the device uses the mobile 4G technology to communicate and transfer data.

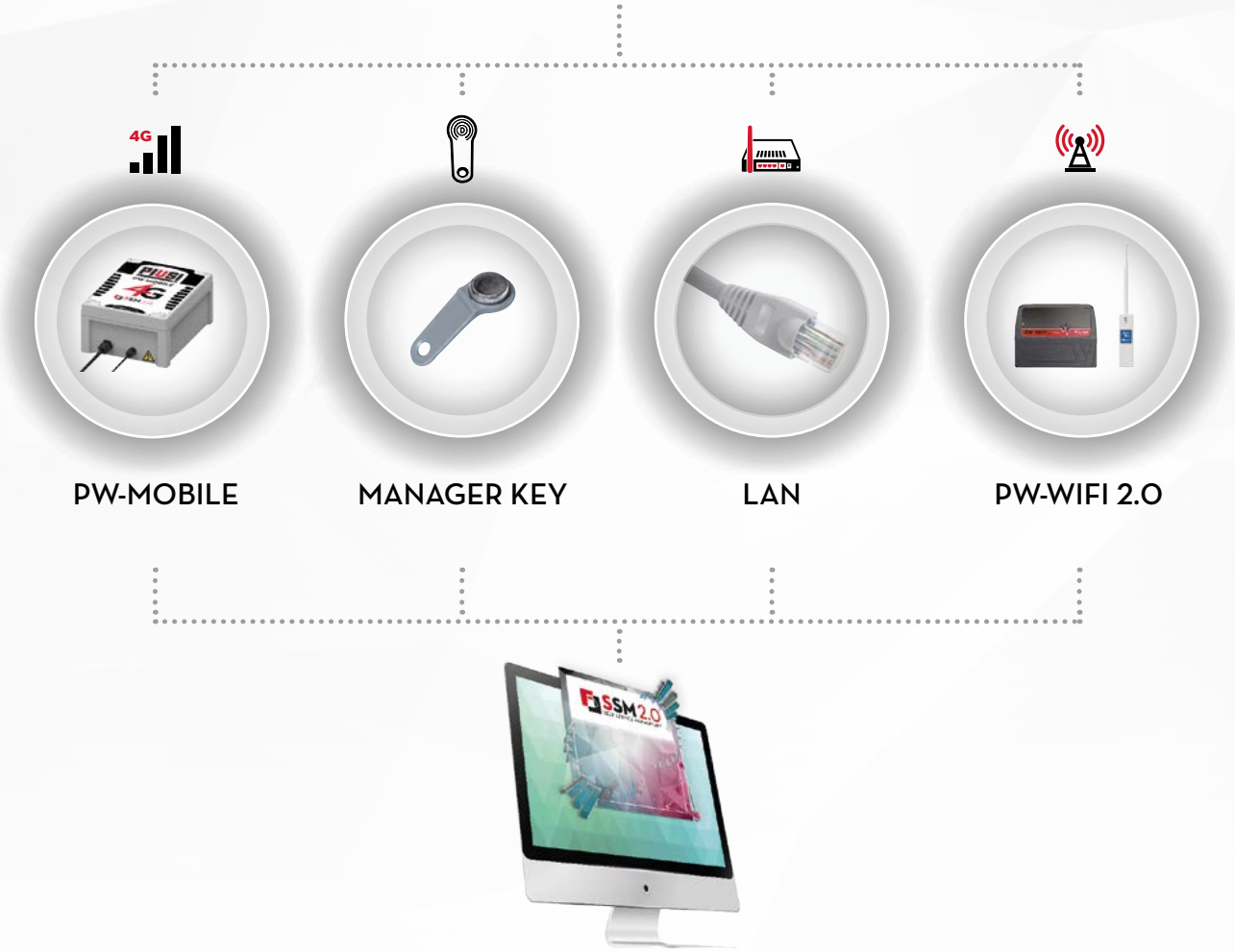

PW MOBILE

A new communication system that allows you to transfer data using mobile 4G network.

KEY READER & MANAGER KEY 2.0

LAN

A network card that allows the RS485 signal to be converted for connection to a LAN, through a simple and intuitive interface.

PW WI-FI

A device that allows to convert the RS485 signal to Wi-Fi, through a simple and intuitive interface.

TECHNICAL DATA

CODE	DESCRIPTION
F1226201A	KIT KEY READER SELF SERVICE 2.0
F20552010	MANAGER KEY 2.0 (GREY)
F1271012A	PW WI-FI 2.0
F12710130	PW MOBILE 4G 2.0

DATA TRANSFER SSM2.0

CUBE MC 2.0

FEATURES

- STURDY STRUCTURE
- BUILT-IN LAN ADAPTER
- COMPACT DESIGN
- SSM 2.0 SOFTWARE REQUIRED
- IP55
- IDEAL FOR FUEL MANAGEMENT

The PIUSI CUBE MC 2.0 is the perfect solution for those who need safe and simple, high-volume fuel dispensing operations while checking transactions and managing their own fleet. The system is equipped with the same main feature of the CUBE MC, and includes a built-in LAN connection. SSM 2.0 Software required.

PERFORMANCE

UP TO 90 L/MIN	UP TO 1000
FLOW RATE	USERS

± 0,5%
ACCURACY

CUBE MC 2.0

CUBE MC 2.0 WITH PEDESTAL (OPTIONAL)

PACKAGING

CODE	WEIGHT		PACKAGING			N. BOXES / EUROPALLET	
	KG	LBS	MM	INCH	PCS/BOX	✈	🚢
F0059600B	25	55	400X400X460	-	1	12	24
F0059610B	25	55	400X400X460	-	1	12	24

CHART

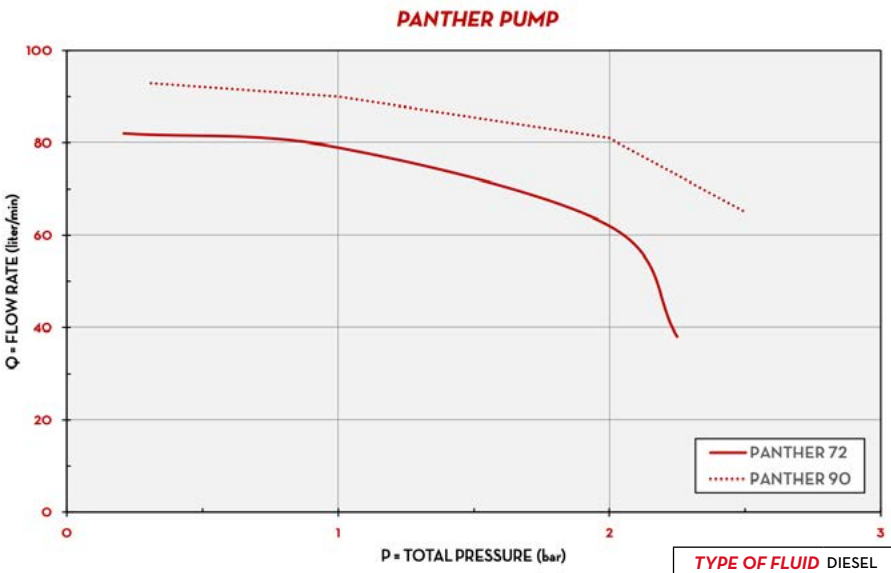

TYPE OF FLUID	DIESEL
TEMPERATURE	20°C

IN THE BOX

- CUBE MC 2.0 DISPENSER
- AUTOMATIC NOZZLE
- DELIVERY HOSE
- INSTRUCTION MANUAL

DETAILS

SHUTTER

USER&VEHICLE KEY (n.i.)

SSM 2.0 SELF SERVICE MANAGEMENT

SSM 2.0 SOFTWARE (pag. 20)

SSM 2.0 SELF SERVICE MANAGEMENT

DATA TRANSFER SSM2.0 (pag. 22)

DIMENSIONS

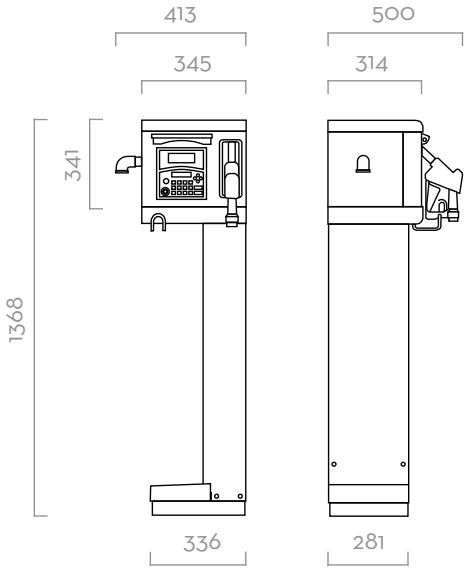

Dimensions expressed in millimeters

MATERIALS

- PUMPS:
  - PANTHER AC — PAG. 100
  - PANTHER DC — PAG. 116
- METER:
  - K600/3 — PAG. 136
- NOZZLE:
  - AUTOMATIC NOZZLE — PAG. 160

TECHNICAL DATA

CODE	DESCRIPTION	FLUIDS TYPE	FLOW RATE		VOLTAGE			PUMP	METER	NOZZLE	FILTER	INLET	HOSE LENGTH	SELF SERVICE MANAGEMENT 2.0
			L/MIN	GPM	AC V./HZ DC VOLT	POWER WATT	AMP. MAX.	TYPE	TYPE	TYPE	H2O FILTER	BSP	METERS	
F005960OB	CUBE 70 MC 2.0	D	70	18	230/50	900	4,9	PANTH 72	K600	A60	NO	1"	4	REQUIRED
F005961OB	CUBE 90 MC 2.0	D	90	23,8	230/50	900	4,9	PANTH 90	K600	A120	NO	1"	4	REQUIRED

CUBE MC 2.0

SELF SERVICE MC 2.0

FEATURES

- STURDY STRUCTURE
- ALL-IN-ONE DISPENSER
- BUILT-IN LAN ADAPTER
- FRONT DOOR FOR EASY MAINTENANCE
- SSM 2.0 SOFTWARE REQUIRED
- IP55
- IDEAL FOR FUEL MANAGEMENT

The PIUSI SELF SERVICE MC 2.0 is a non-commercial fuel diesel dispenser able to fit any fleet management requirement. It requires the SSM 2.0 software to work. Equipped with 90 l/min continuous duty pump, it is suitable for any fleet dimension.

PERFORMANCE

UP TO 90 L/MIN FLOW RATE	AC CONTINUOUS DUTY POWER
± 0,5% ACCURACY	UP TO 1000 USERS

ELECTRONIC METER INTEGRATED

SELF SERVICE MC 2.0

PACKAGING

CODE	WEIGHT		PACKAGING			N. BOXES / EUROPALLET	
	KG	LBS	MM	INCH	PCS/BOX	✈	🚢
COLUMN VERSION							
F0074302B	75	165	1478X488X400	-	1	6	4

CHART

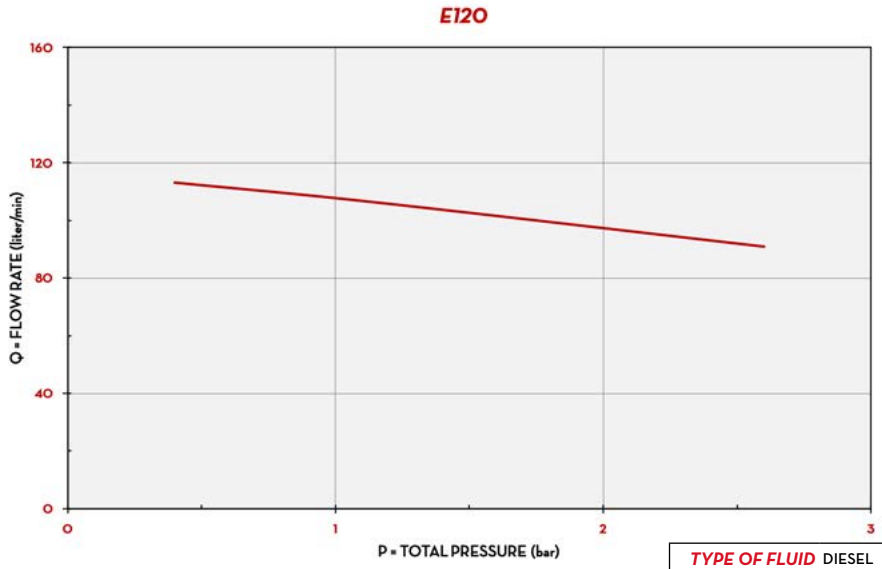

TYPE OF FLUID	DIESEL
TEMPERATURE	13°C

IN THE BOX

- SELF SERVICE MC 2.0 DISPENSER
- DELIVERY HOSE
- AUTOMATIC NOZZLE
- INSTRUCTION MANUAL

DETAILS

WATER CAPTOR FILTER

DRIVER&VEHICLE KEY (n.i.)

SSM 2.0 SELF SERVICE MANAGEMENT
SSM 2.0 SOFTWARE (pag. 20)

SSM 2.0 SELF SERVICE MANAGEMENT
DATA TRANSFER SSM2.0 (pag. 22)

DIMENSIONS

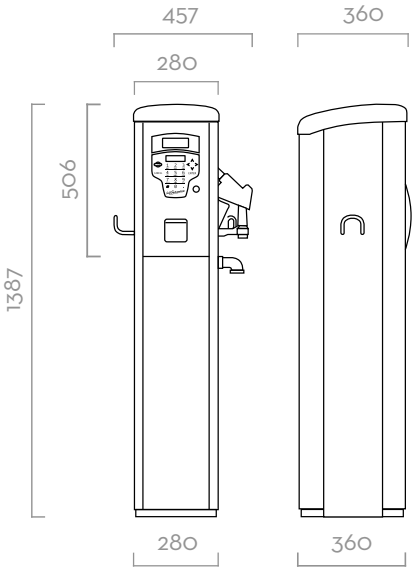

Dimensions expressed in millimeters

MATERIALS

- PUMPS:
  E80 / E120 — PAG. 104
- METER:
  K600/3 — PAG. 136
- NOZZLE:
  AUTOMATIC NOZZLE — PAG. 160
- FILTER:
  WATER CAPTOR — PAG. 172

TECHNICAL DATA

CODE	DESCRIPTION	FLUIDS TYPE	FLOW RATE		VOLTAGE			PUMP	METER	NOZZLE	FILTER		INLET	HOSE LENGTH	SELF SERVICE MANAGEMENT 2.0
			L/MIN	GPM	AC V./HZ DC VOLT	POWER WATT	AMP. MAX.	TYPE	TYPE	TYPE	H2O FILTER	FILTERING CAPACITY	BSP	METERS	
COLUMN VERSIONS															
F0074302B	SELF SERVICE 100 MC 2.0	D	90	24	230/50	1150	5,7	E120	K600	A120	YES	30µ	1" 1/2	4	REQUIRED

SELF SERVICE MC 2.0

SELF SERVICE FM 2.0

FEATURES

- IDEAL FOR FUEL MANAGEMENT
- TANK LEVEL INDICATOR
- TICKET PRINTER
- MULTI-USER MANAGEMENT
- STURDY STRUCTURE
- EASY MAINTENANCE
- HIGH DISPLACEMENT VANE PUMP
- SSM 2.0 SOFTWARE REQUIRED
- IP55

The PIUSI SELF SERVICE FM 2.0 is the top-level, all-in-one dispenser for fuel with integrated LAN connection to guarantee continuous communication between dispenser and PC, water captor filter to ensure the highest purity of fluids, OCIO 2.0 tank level indicator and an electronic panel able to manage up to 1000 users and 650 transactions. Compatible with SSM 2.0 software.

PERFORMANCE

UP TO 90 L/MIN FLOW RATE	AC CONTINUOUS DUTY POWER
± 0,5% ACCURACY	UP TO 1000 USERS

INTEGRATED TICKET PRINTER

SELF SERVICE FM 2.0

PACKAGING

CODE	WEIGHT		PACKAGING			N. BOXES / EUROPALLET	
	KG	LBS	MM	INCH	PCS/BOX	✈	🚢
COLUMN VERSION							
F0074301A	75	165	1478X488X400	-	1	6	4

CHART

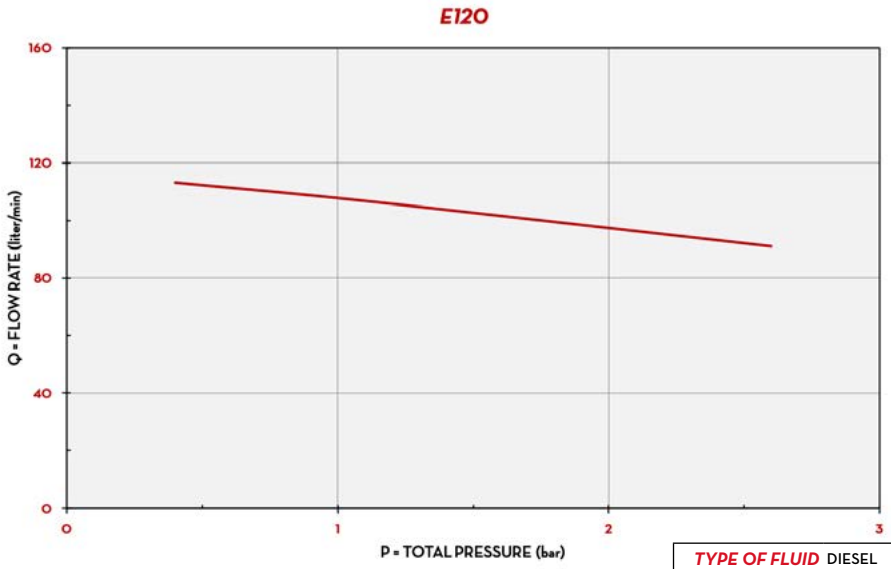

TYPE OF FLUID	DIESEL
TEMPERATURE	13°C

IN THE BOX

- SELF SERVICE FM 2.0 DISPENSER
- DELIVERY HOSE
- AUTOMATIC NOZZLE
- INSTRUCTION MANUAL

DETAILS

WATER CAPTOR FILTER

DRIVER&VEHICLE KEY (n.i.)

SSM 2.0 SELF SERVICE MANAGEMENT
SSM 2.0 SOFTWARE (pag. 20)

OCIO 2.0 INTEGRATED

DIMENSIONS

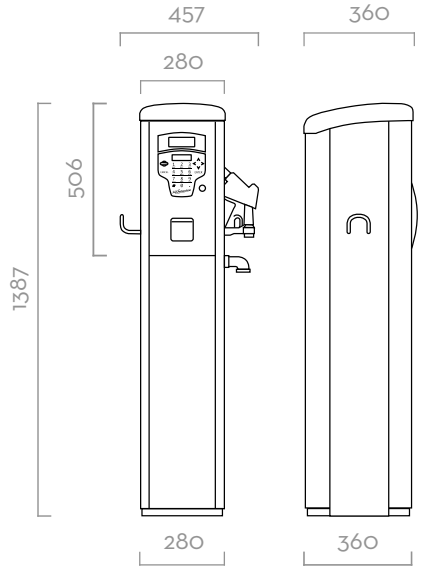

Dimensions expressed in millimeters

MATERIALS

- PUMP:
  E120 PAG. 104
- METER:
  K600/3 PAG. 136
- NOZZLE:
  AUTOMATIC NOZZLE PAG. 160
- FILTER:
  WATER CAPTOR PAG. 172

TECHNICAL DATA

CODE	DESCRIPTION	FLUIDS TYPE	FLOW RATE		VOLTAGE			PUMP	METER	NOZZLE	FILTER		INLET	HOSE LENGTH	SELF SERVICE MANAGEMENT 2.0
			L/MIN	GPM	AC V./HZ DC VOLT	POWER WATT	AMP. MAX.	TYPE	TYPE	TYPE	H2O FILTER	FILTERING CAPACITY	BSP	METERS	
COLUMN VERSIONS															
F0074301A	SELF SERVICE 100 FM 2.0	D	90	24	230/50	1150	5,7	E120	K600	A120	YES	30µ	1" 1/2	4	REQUIRED

SELF SERVICE FM 2.0

MCBOX 2.0

FEATURES

- FLEET MANAGEMENT
- SUITABLE FOR ANY PUMP
- PULSE METER INPUT
- LAN/WI-FI VERSION AVAILABLE
- SSM2.0 SOFTWARE REQUIRED

The PIUSI MCBOX 2.0 is the evolution of the MCBOX system thanks to the integration with the 2.0 features: fuel consumption monitoring and report, fleet management, vehicles and users control. It is suitable to manage and control an existing pump, pulse meter and nozzle.

PERFORMANCE

UP TO 1000	AC VOLTAGE
USERS / VEHICLES	POWER

MC BOX 2.0

PACKAGING

CODE	WEIGHT		PACKAGING		
	KG	LBS	MM	INCH	PCS/BOX
F0059701A	6	13,2	300X300X330	11,8X11,8X13	1
F0059702A	6	13,2	300X300X330	11,8X11,8X13	1

CONNECTION SCHEME

IN THE BOX

- MCBOX 2.0 UNIT
- LAN OR WI-FI ADAPTER
- INSTRUCTION MANUAL

DETAILS

SHUTTER

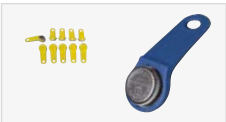

USER&VEHICLE KEY

SSM 2.0 SELF SERVICE MANAGEMENT

SSM 2.0 SOFTWARE (pag. 20)

EASY ACCESS TO CONNECTION

DIMENSIONS

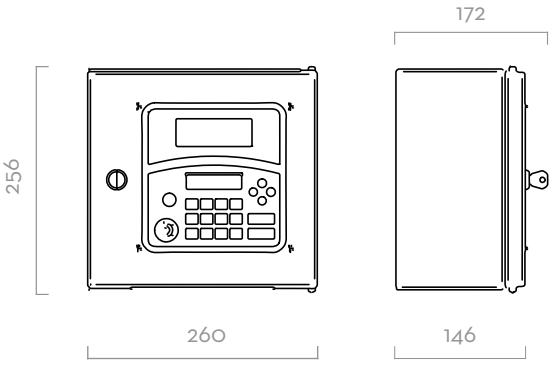

Dimensions expressed in millimeters

TECHNICAL DATA

CODE	DESCRIPTION	FLUIDS TYPE	CONNECTION	VOLTAGE			SSM 2.0 SOFTWARE
				AC V./HZ	POWER WATT	AMP. MAX. (load motor)	
F0059701A	MCBOX LAN 2.0 90-240V 50/60HZ	A Ad B D F G G K O W W	LAN	90-240 V 50/60 HZ	10	50	REQUIRED
F0059702A	MCBOX 2.0 WIFI 90-240V 50/60HZ	A Ad B D F G G K O W W	WI-FI	90-240 V 50/60 HZ	10	25	REQUIRED

MCBOX 2.0

SSM AGILIS

FEATURES

- VIRTUAL TANK MONITORING
- EASY INSTALLATION
- REPORT TRANSACTION
- CUSTOMIZABLE EXPORTS

AGILIS products can be used on their own, but with the SSM AGILIS software they become true allies of the company owner.
This software is constantly being developed and updated by PIUSI, so much so that it is the benchmark for all entry-level fuel management systems to easily, and comprehensively, monitor dispensing in every company vehicle.

AGILIS IS THE IDEAL SYSTEM FOR SMALL & MEDIUM ENTERPRISES

PERFORMANCE

UP TO 16	USB/WEB SOFTWARE VERSION
DISPENSERS	INSTALLATION

SOFTWARE ACTIVATION MODE

USB HARDWARE KEY
without internet connection

WEB EDITION
internet connection required

An effective system for small and medium enterprises that use their own tanks for refuelling their work vehicles with diesel

- Offers a wide range of solutions in terms of applications, dispenser type and voltage
- Authorises access to fuel simply and automatically, by means of a PIN or yellow key
- Manages up to 250 users per dispenser
- Monitors tank level (virtual tanks only)
- Records all dispensing data
- Easy to connect to your computer in the way that suits you best: PW14, PW Mobile, PW Lan, PW Wifi, Manager Key
- Exports full, custom reports
- Works both with and without dedicated software

BENEFITS

Prevents losses and unauthorised withdrawals

Prevents machine downtimes caused by fuel shortages

Optimises reporting, thereby freeing up company resources

Provides long service-life due to its rugged construction, high quality and ease of use

TECHNICAL DATA

CODE	DESCRIPTION
F00773050	SELF SERVICE MANAGEMENT AGILIS - USB
F00773250	SELF SERVICE MANAGEMENT AGILIS - WEB

DATA TRANSFER AGILIS

DATA TRANSFER SSM AGILIS is a set of different solutions that let to download the transactions from the dispensers to the SELF SERVICE MANAGEMENT AGILIS software. The great variety of the offer is based on the technology required.

Manual download
The easiest way to download the informations is through the Manager key, it is enough to touch the dispenser with the key to transfer all the transactions and download them on the software.

Local network
Use the local network Lan/Wi-Fi to download the dispenser to your pc. By choosing between the PWLAN or PW Wi-Fi it is possible to set up a connection that let you receive all the transactions in real time.

Mobile network
Thanks to the new PW MOBILE 4G is now possible to install all the dispensers everywhere in the world with just the need of a mobile network coverage, with SIM card, avoiding all the local network configurations.

PW14 / RS 485

Connection via RS485 cable with USB converter.

KEY READER, MANAGER KEY & MANAGER KEY USB TYPE C

PW LAN

A device that allows to convert the RS485 signal to LAN, through a simple and intuitive interface.

PW WI-FI

A device that allows to convert the RS485 signal to Wi-Fi, through a simple and intuitive interface.

PW MOBILE

A new communication system that allows you to transfer data using mobile 4G network.

TECHNICAL DATA

CODE	DESCRIPTION
F13292000	PW 14 - USB CONVERTER
F1226201A	KIT KEY READER
F23525000	MANAGER KEY USB TYPE C
F1249600A	MANAGER KEY
F1271005A	PW-LAN
F1271004B	PW-WIFI
F1271015A	PW MOBILE 4G

DATA TRANSFER SSM AGILIS

CUBE MC

FEATURES

- MULTI-USER MANAGEMENT
- ALL-IN-ONE EQUIPMENT
- COMPACT DESIGN
- COMPATIBLE WITH SSM AGILIS SOFTWARE
- SUCTION FILTER
- IP55

The PIUSI CUBE MC is the upgraded version of the world famous CUBE dispenser equipped with an electronic panel able to manage up to 250 users and 255 transactions. The sturdy structure includes a self-priming vane pump, built-in bypass, automatic nozzle, and integrated nozzle holder with start/stop pump lever.

PERFORMANCE

UP TO 70 L/MIN FLOW RATE	AC/DC VOLTAGE POWER
± 0,5% ACCURACY	UP TO 250 USERS

CUBE 70 MC

CUBE 70 MC WITH PEDESTAL (OPTIONAL)

PACKAGING

CODE	WEIGHT		PACKAGING			N. BOXES / EUROPALLET	
	KG	LBS	MM	INCH	PCS/BOX	✈	🚢
F0059415D	25	55	400X400X460	-	1	12	24
F005940OE	25	55	400X400X460	-	1	12	24
F0059423D	25	55	400X400X460	-	1	12	24
F0059422B	25	55	400X400X460	-	1	12	24
F0059413D	25	55	400X400X460	-	1	12	24
F0059414D	25	55	400X400X460	-	1	12	24

CHART

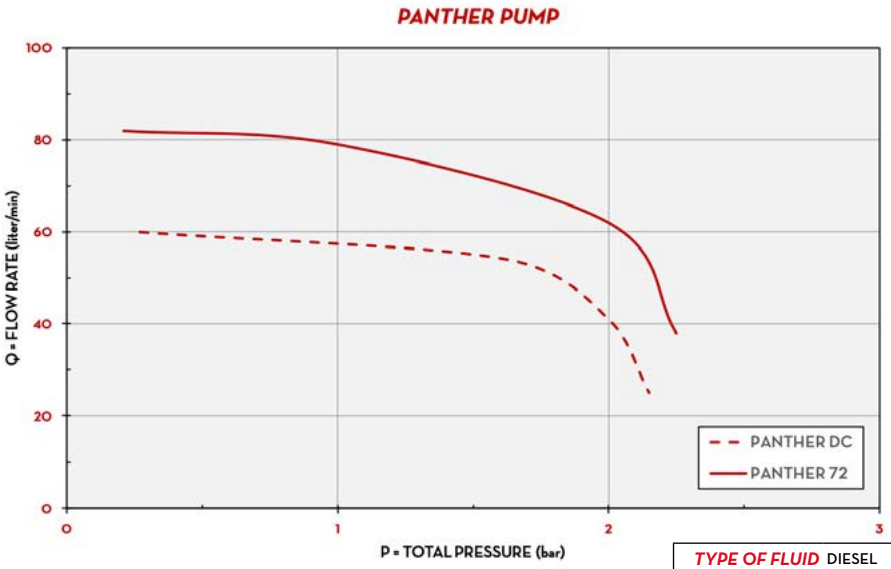

TYPE OF FLUID	DIESEL
TEMPERATURE	22°C

IN THE BOX

- CUBE MC DISPENSER
- AUTOMATIC NOZZLE
- DELIVERY HOSE
- INSTRUCTION MANUAL

DETAILS

SHUTTER

DRIVER KEY (not included)

DATA TRANSFER AGILIS

SSM AGILIS SOFTWARE

DIMENSIONS

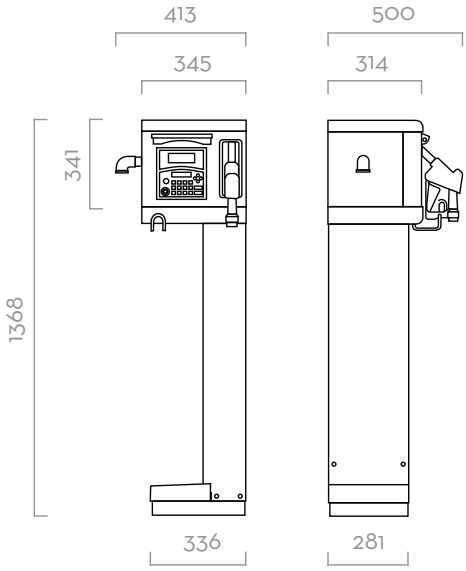

Dimensions expressed in millimeters

MATERIALS

- PUMPS:
  - PANTHER AC — PAG. 100
  - PANTHER DC — PAG. 116
- METER:
  - K600/3 — PAG. 136
- NOZZLE:
  - AUTOMATIC NOZZLE — PAG. 160

TECHNICAL DATA

CODE	DESCRIPTION	FLUIDS TYPE	FLOW RATE		VOLTAGE			PUMP	METER	NOZZLE	FILTER	INLET	HOSE		PC	USERS
			L/MIN	GPM	AC V./HZ DC VOLT	POWER WATT	AMP. MAX.	TYPE	TYPE	TYPE	H2O FILTER	BSP	LENGTH	Ø	CONNECTION	N.
F0059415D	CUBE 70 MC 230V/50HZ 250U AGILIS	D	70	18	230/50	800	3.9	PANTH 72	K600	A60	NO	1"	4M	1"	SI	250
F0059400E	CUBE 70 MC 230V/50HZ 80U AGILIS	D	70	18	230/50	800	3.9	PANTH 72	K600	A60	NO	1"	4M	1"	SI	80
F0059423D	CUBE 70 MC 120V/60HZ 250U AGILIS	D	60	15	120/60	550	5	PANTH 72	K600	A60	NO	1"	4M	1"	SI	250
F0059422B	CUBE 70 MC 12V 250U AGILIS	D	60	15	12	420	35	PANTH DC	K600	A60	NO	1"	4M	1"	SI	250
F0059413D	CUBE 70 MC 12V 80U AGILIS	D	60	15	12	420	35	PANTH DC	K600	A60	NO	1"	4M	1"	SI	80
F0059414D	CUBE 70 MC 24V 80U AGILIS	D	70	18	24	600	25	PANTH DC	K600	A60	NO	1"	4M	1"	SI	80

UPON REQUEST IT IS AVAILABLE WITH DIFFERENT VOLTAGES AND 60 HZ FREQUENCY

SELF SERVICE MC

FEATURES

- MULTI-USER MANAGEMENT
- WATER CAPTOR FILTER
- ALL-IN-ONE EQUIPMENT
- COMPACT DESIGN
- COMPATIBLE WITH SSM AGILIS SOFTWARE
- IP55

The PIUSI SELF SERVICE MC is a complete device suitable to fit all diesel dispensing needs. With its sturdy structure, this dispenser is equipped with a high capacity vane pump, built-in bypass, automatic nozzle, water captor filter and electronic panel able to manage up to 80 users and 255 transactions.

PERFORMANCE

UP TO 90 L/MIN FLOW RATE	AC CONTINUOUS DUTY POWER
± 0,5% ACCURACY	UP TO 250 USERS

ELECTRONIC METER INTEGRATED

SELF SERVICE MC

PACKAGING

CODE	WEIGHT		PACKAGING			N. BOXES / EUROPALLET	
	KG	LBS	MM	INCH	PCS/BOX	✈	🚢
COLUMN VERSION							
F00738O1E	67	148	1478X488X400	-	1	6	4
F00741O1E	75	165	1478X488X400	-	1	6	4
TANK VERSION							
F00738B0E	57	126	1080X488X400	-	1	6	4
F00741B0E	65	143	1080X488X400	-	1	6	4

CHART

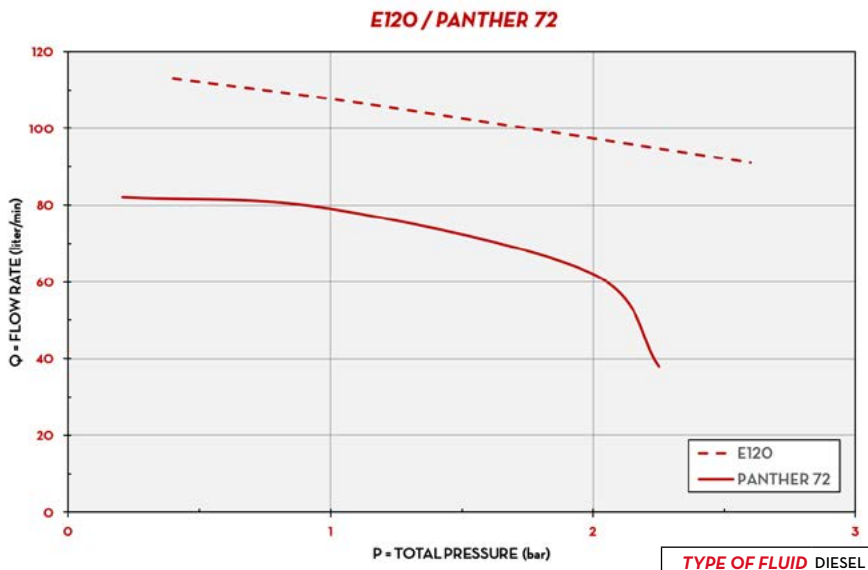

TYPE OF FLUID	DIESEL
TEMPERATURE	20°C

IN THE BOX

- SELF SERVICE MC DISPENSER
- DELIVERY HOSE
- AUTOMATIC NOZZLE
- INSTRUCTION MANUAL

DETAILS

TANK VERSION AVAIVLABLE

WATER CAPTOR FILTER

DRIVER KEY (not included)

AGILIS SELFSERVICE MANAGEMENT
SSM AGILIS SOFTWARE

DIMENSIONS

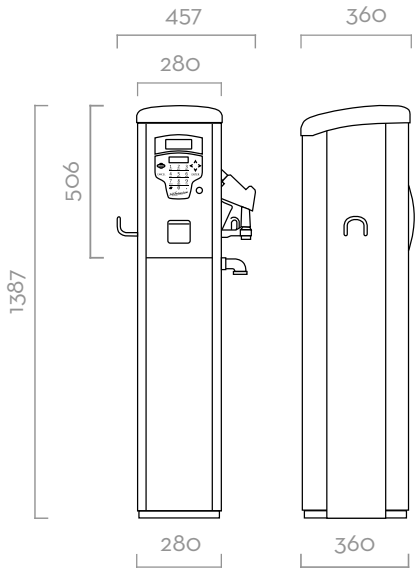

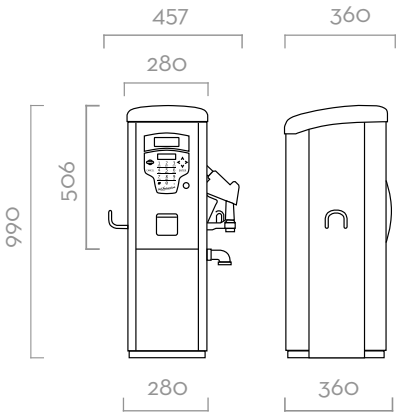

Dimensions expressed in millimeters

MATERIALS

- PUMPS:
  PANTHER 72 / E120 — PAG. 100/104
- METER:
  K600/3 — PAG. 136
- NOZZLE:
  AUTOMATIC NOZZLE — PAG. 160
- FILTER:
  WATER CAPTOR — PAG. 172

TECHNICAL DATA

CODE	DESCRIPTION	FLUIDS TYPE	FLOW RATE		VOLTAGE			PUMP	METER	NOZZLE	FILTER		INLET	HOSE LENGTH	PC
			L/MIN	GPM	AC V./HZ DC VOLT	POWER WATT	AMP. MAX.	TYPE	TYPE	TYPE	H2O FILTER	FILTERING CAPACITY	BSP	METERS	CONNECTION
COLUMN VERSIONS															
F00738O1E	SELF SERVICE 70 MC 230V/50HZ AGILIS	D	70	18	230/50	800	3.9	PANTH 72	K600	A80	SI	30µ	1" 1/2	4	SI
F00741O1E	SELF SERVICE 100 MC 230V/50HZ AGILIS	D	90	24	230/50	1100	5.5	E 120	K600	A120	SI	30µ	1" 1/2	4	SI
TANK VERSIONS															
F00738BOE	SELF SERVICE TANK 70MC 230V AGILIS	D	70	18	230/50	800	3,9	PANTH 72	K600	A80	NO	-	1" 1/2	4	SI
F00741BOE	SELF SERVICE TANK100MC 230V AGILIS	D	90	24	230/50	1100	5,5	E 120	K600	A120	NO	-	1" 1/2	4	SI

UPON REQUEST IT IS AVAILABLE WITH DIFFERENT VOLTAGES AND 60 HZ FREQUENCY

SELF SERVICE MC

MCBOX

FEATURES

- ACCESS CONTROL
- SUITABLE FOR ANY PUMP
- PULSE METER INPUT
- EASY TO INSTALL
- MULTI USERS
- COMPATIBLE WITH SSM AGILIS SOFTWARE

The PIUSI MCBOX is a practical electronic multi-user control panel that allows to manage and control an existing pump, pulse meter and nozzle. Integrated with the SELF SERVICE MANAGEMENT AGILIS, it grants the possibility to download all the transactions.

PERFORMANCE

UP TO 250	AC/DC VOLTAGE
USERS	POWER

MCBOX

PACKAGING

CODE	WEIGHT		PACKAGING		
	KG	LBS	MM	INCH	PCS/BOX
F1398000D	5	11	300X300X180	11,8X11,8X7	1
F1398005C	5	11	300X300X180	11,8X11,8X7	1
F13980130	5	11	300X300X180	11,8X11,8X7	1

ANY BIODIESEL · AIR · ANTIFREEZE · AdBlue® · BIODIESEL · DIESEL · FOOD · GASOLINE · GREASE · KEROSENE · OIL · WATER · WINDSCREEN

CONNECTION SCHEME

IN THE BOX

- MCBOX UNIT
- INSTRUCTION MANUAL

DETAILS

SHUTTER

SSM AGILIS SOFTWARE

EASY ACCESS TO CONNECTION

DIMENSIONS

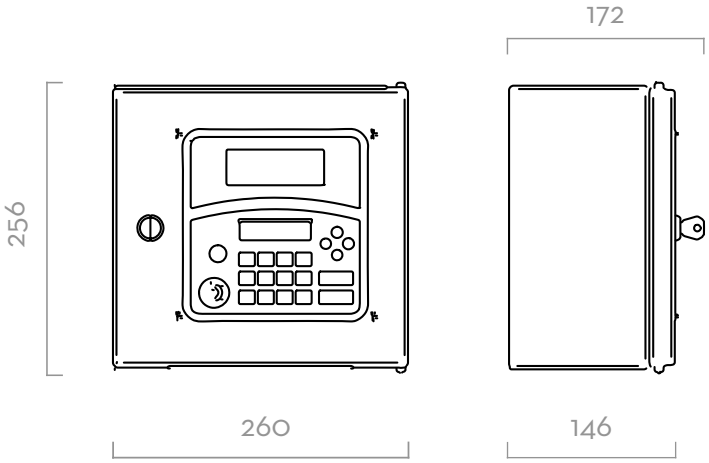

Dimensions expressed in millimeters

TECHNICAL DATA

CODE	DESCRIPTION	FLUIDS TYPE	USERS	VOLTAGE			SSM AGILIS SOFTWARE
				AC V./HZ	POWER WATT	AMP. MAX. (load motor)	
F13980000D	MCBOX 100-240V 80U AGILIS	A Ad B D F G G K O W W	250	100/240	5	15	OPTIONAL
F13980050C	MCBOX 100-240V 250U AGILIS	A Ad B D F G G K O W W	80	100/240	5	15	OPTIONAL
F13980130	MCBOX 12V/24V 250U AGILIS	A Ad B D F G G K O W W	250	12/24	5	50/25	OPTIONAL

FUEL MANAGEMENT SYSTEMS ACCESSORIES

B.SMART

CUBE B.SMART	CODE	DESCRIPTION
	F22500000	DRIVER ACCESS (X10)
	F00770D20	DRIVER ACCESS (X50)
	F1590400A	USER KEY (YELLOW KEY: 10PCS)
	F1270800C	PEDESTAL
	F1273700A	KIT WALL SUPPORT

F1590400A F1270800C F1273700A

SELF SERVICE MC B.SMART	CODE	DESCRIPTION
	F22500000	DRIVER ACCESS (X10)
	F00770D20	DRIVER ACCESS (X50)
	F1590400A	USER KEY (YELLOW KEY: 10PCS)

F1590400A

MCBOX B.SMART	CODE	DESCRIPTION
	F22500000	DRIVER ACCESS (X10)
	F00770D20	DRIVER ACCESS (X50)
	F1590400A	USER KEY (YELLOW KEY: 10PCS)
	F1270800C	PEDESTAL
	F1273700A	KIT WALL SUPPORT
	F17121000	LEVEL PROBE FOR ACCESS 85

F1590400A F1270800C F1273700A

SSM2.0

CUBE MC 2.0	CODE	DESCRIPTION
	F0893000A	KIT QUICK COUPLING 2IN X 1IN
	F1270800C	KIT PEDESTAL CUBE BLACK
	F1273700A	WALL KIT CUBE
	F1273800A	KIT PADLOCK CUBE MC
	F1590400A	KIT DRIVER KEY YELLOW (10PCS)
	F17163000	2" BSP DRUM CONNECTOR WITH VALVE
	F17299000	KIT VEHICLE KEY BLUE (10PCS)

F1270800C F1273700A R08930000 F17163000

F1590400A F17299000

SELF SERVICE MC 2.0	CODE	DESCRIPTION
	F1590400A	KIT DRIVER KEY YELLOW (10PCS)
	F17299000	KIT VEHICLE KEY BLUE (10PCS)

F1590400A F17299000

SELF SERVICE FM 2.0	CODE	DESCRIPTION
	F1590400A	KIT DRIVER KEY YELLOW (10PCS)
	F17299000	KIT VEHICLE KEY BLUE (10PCS)

F1590400A F17299000

SSM2.0

MCBOX 2.0	CODE	DESCRIPTION
	F1270800C	KIT PEDESTAL CUBE BLACK
	F1590400A	KIT DRIVER KEY YELLOW (10PCS)
	F17299000	KIT VEHICLE KEY BLUE (10PCS)
	F17121000	LEVEL PROBE FOR ACCESS 85

F1270800C

F17121000

F1590400A

F17299000

SSM AGILIS

CUBE MC	CODE	DESCRIPTION
	F0893000A	KIT QUICK COUPLING 2IN X 1IN
	F1249600A	MANAGER KEY
	F1270800C	KIT PEDESTAL CUBE BLACK
	F1273700A	WALL KIT CUBE
	F1273800A	KIT PADLOCK CUBE MC
	F1590400A	KIT DRIVER KEY YELLOW (10PCS)
	F17163000	2" BSP DRUM CONNECTOR WITH VALVE

F1270800C

F1273700A

R08930000

F17163000

F1590400A

F1249600A

SELF SERVICE MC	CODE	DESCRIPTION
	F1249600A	MANAGER KEY
	F1590400A	KIT DRIVER KEY YELLOW (10PCS)

F1590400A

F1249600A

AGILIS SELFSERVICE MANAGEMENT
F00773050
F00773250

MCBOX	CODE	DESCRIPTION
	F1249600A	MANAGER KEY
	F1270800C	KIT PEDESTAL CUBE BLACK
	F1590400A	KIT DRIVER KEY YELLOW (10PCS)
	F1623900B	NOZZLE HOLDER SS+CABLED SWITCH FM/MC
	F17121000	LEVEL PROBE FOR ACCESS 85

F1270800C

F1590400A

R1623900A

F1249600A

F17121000

DISPENSERS

CUBE

FEATURES

- STURDY STRUCTURE
- MECHANICAL METER
- INDUCTION THERMAL-PROTECTED MOTOR
- OVERLOAD PROTECTION
- BUILT-IN MESH FILTER
- IP 55

The PIUSI CUBE is a range of mechanical fuel transfer dispenser for non-commercial use, composed of a self-priming vane pump fitted with integrated bypass valve, automatic nozzle with swivel connection and integrated nozzle holder with start/stop pump lever. Its versatility allows different applications: on walls, on tanks, on cisterns, on drums or stand-alone (with the optional pedestal).

PERFORMANCE

UP TO 90 L/MIN FLOW RATE	AC/DC VOLTAGE POWER
±1% ACCURACY	

CUBE 56 WITH FILTER

CUBE 56 WITH PEDESTAL (OPTIONAL)

PACKAGING

CODE	WEIGHT		PACKAGING			N. BOXES / EUROPALLET	
	KG	LBS	MM	INCH	PCS/BOX	✈	🚢
F00575400	22	46	400X400X460	-	1	12	24
00057516A	21	46	400X400X460	-	1	12	24
00057500C	21	46	400X400X460	-	1	12	24
F0057600C	21	46	400X400X460	-	1	12	24
F0057700C	21	46	400X400X460	-	1	12	24
F00591200	22	48	400X400X460	-	1	12	24
F0059100A	21	46	400X400X460	-	1	12	24
F0059111A	21	46	400X400X460	-	1	12	24
F00592000	22	46	400X400X460	-	1	12	24

CHART

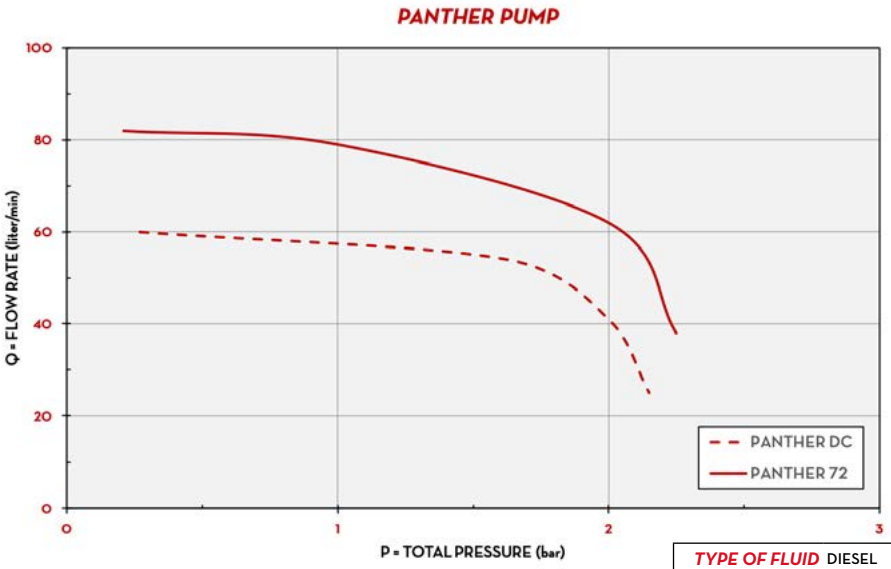

TYPE OF FLUID	DIESEL
TEMPERATURE	+20 / -6°C

IN THE BOX

- CUBE DISPENSER
- AUTOMATIC NOZZLE
- DELIVERY HOSE
- INSTRUCTION MANUAL

DETAILS

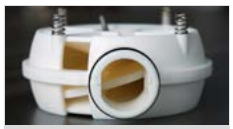

NUTATING DISK METER

K33/K44

DIMENSIONS

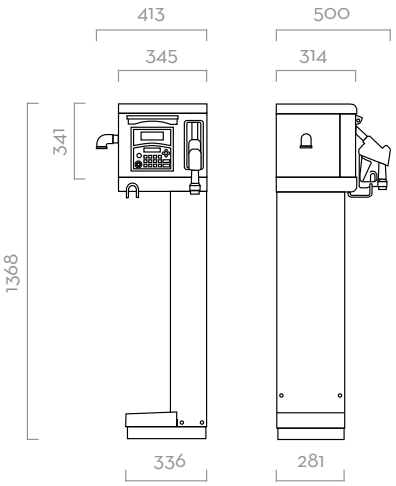

Dimensions expressed in millimeters

COMPONENTS

- PUMPS:
  - PANTHER AC — PAG. 100
  - PANTHER DC — PAG. 116
- METER:
  - K33 / K44 — PAG. 148
- NOZZLE:
  - AUTOMATIC NOZZLE — PAG. 160

TECHNICAL DATA

CODE	DESCRIPTION	FLUIDS TYPE	FLOW RATE		VOLTAGE			PUMP	METER	NOZZLE	FILTER		INLET	HOSE	
			L/MIN	GPM	AC V./HZ DC VOLT	POWER WATT	AMP. MAX.	TYPE	TYPE	TYPE	H2O FILTER	FILTERING CAPACITY	BSP	LENGTH	Ø
F00575400	CUBE 56/33 + FILTER	D	56	15	230/50	350	3	PANTH 56	K33	A60	YES	30 µ	1"	6M	3/4"
00057516A	CUBE 56/44 PULSER	D	56	15	230/50	350	3	PANTH 56	K44	A60	NO	-	1"	4M	3/4"
00057500C	CUBE 56/33	D	56	15	230/50	350	3	PANTH 56	K33	A60	NO	-	1"	4M	3/4"
F0057600C	CUBE 56 DC 12V	D	56	15	12	300	35	PANTH DC	K33	A60	NO	-	1"	4M	1"
F0057700C	CUBE 70 DC 24V	D	70	18	24	420	25	PANTH DC	K33	A60	NO	-	1"	4M	3/4"
F00591200	CUBE 70/33 + FILTER	D	70	18	230/50	500	4,2	PANTH 72	K33	A60	YES	30 µ	1"	6M	1"
F0059100A	CUBE 70/33	D	70	18	230/50	500	4,2	PANTH 72	K33	A60	NO	-	1"	4M	1"
F0059111A	CUBE 70/44 PULSER	D	70	18	230/50	500	4,2	PANTH 72	K44	A60	NO	-	1"	4M	1"
F00592000	CUBE 90/44	D	90	23,8	230/50	700	4,9	PANTH 90	K44	A120	NO	-	1"	4M	1"

UPON REQUEST IT IS AVAILABLE WITH DIFFERENT VOLTAGES AND 50/60 HZ FREQUENCY

SELF SERVICE K44

FEATURES

- ALL-IN-ONE EQUIPMENT
- WATER CAPTOR FILTER
- COMPACT DESIGN
- IP55

The PIUSI SELF SERVICE K44 is a fuel dispenser unit equipped with a high capacity vane pump, built-in bypass valve and mechanical K44 meter. Particularly suitable for all the needs of high-flow rate diesel dispensing, it guarantees that the dispensed product is free of water and impurities thanks to the integra-ted filter (column version). Available both as column or tank version, it features a front door for easy maintenance.

PERFORMANCE

UP TO 90 L/MIN FLOW RATE	AC CONTINUOUS DUTY POWER
±1% ACCURACY	

MECHANICAL METER INTEGRATED

SELF SERVICE K44

PACKAGING

CODE	WEIGHT		PACKAGING			N. BOXES / EUROPALLET	
	KG	LBS	MM	INCH	PCS/BOX	✈	🚢
COLUMN VERSIONS							
F0073701B	67	148	1478X488X400	-	1	6	4
F0074001B	75	165	1478X488X400	-	1	6	4
F0074002A	75	165	1478X488X400	-	1	6	4
TANK VERSIONS							
F0073B0B	57	126	1080X488X400	-	1	6	4
F0074B0B	65	143	1080X488X400	-	1	6	4
F0073B2B	57	126	1080X488X400	-	1	6	4

CHART

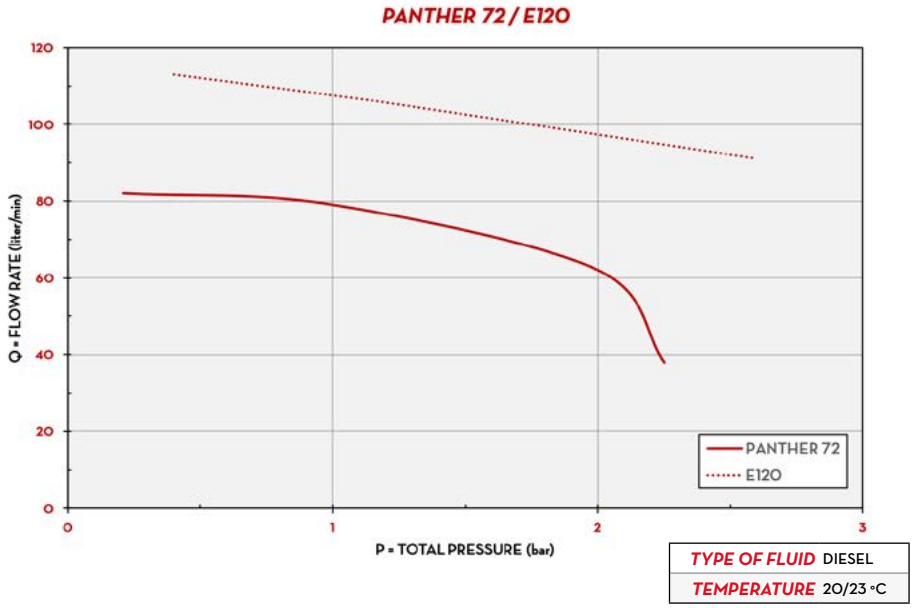

TYPE OF FLUID	DIESEL
TEMPERATURE	20/23 °C

IN THE BOX

- SELF SERVICE K44 DISPENSER
- DELIVERY HOSE
- AUTOMATIC NOZZLE
- INSTRUCTION MANUAL

DETAILS

K44

INTEGRATED FILTER

DIMENSIONS

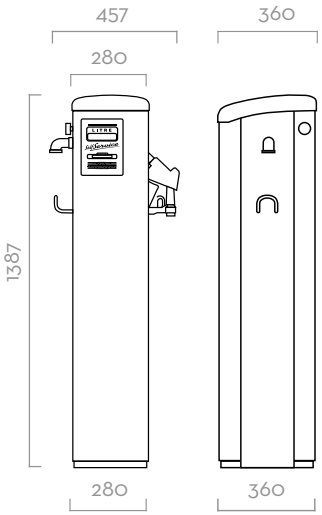

COLUMN VERSION

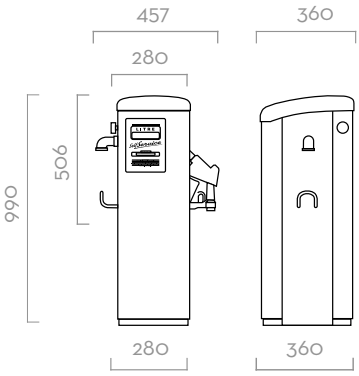

TANK VERSION

Dimensions expressed in millimeters

COMPONENTS

- PUMPS:
  PANTHER AC / E120 — PAG. 100/104
- METERS
  K44 — PAG. 148
- NOZZLE:
  AUTOMATIC NOZZLE — PAG. 160
- FILTER:
  WATER CAPTOR — PAG. 172

TECHNICAL DATA

CODE	DESCRIPTION	FLUIDS TYPE	FLOW RATE		VOLTAGE			PUMP	METER	NOZZLE	FILTER		INLET	HOSE LENGTH	PC
			L/MIN	GPM	AC V./HZ DC VOLT	POWER WATT	AMP. MAX.	TYPE	TYPE	TYPE	H2O FILTER	FILTERING CAPACITY	BSP	METERS	CON-NECTION
COLUMN VERSIONS															
F0073701B	SELF SERVICE 70 K44	D	70	18	230/50	550	3,3	PANTH 72	K44	A80	YES	30µ	1" 1/2	4	NO
F0074001B	SELF SERVICE 100 K44	D	90	24	230/50	1150	5,7	E 120	K44	A120	YES	30µ	1" 1/2	4	NO
F0074002A	SELF SERVICE 100 K44 PULSER	D	90	24	230/50	1150	5,7	E 120	K44 P	A120	YES	30µ	1" 1/2	4	NO
TANK VERSIONS															
F0073708B	SELF SERVICE 70 K44 TANK	D	70	18	230/50	550	3,3	PANTH 72	K44	A80	NO	-	1" 1/2	4	NO
F0074008B	SELF SERVICE 100 K44 TANK	D	90	24	230/50	1150	5,7	E 120	K44	A120	NO	-	1" 1/2	4	NO
F0073782B	SELF SERVICE 70 K44 TANK PULSER	D	70	18	230/50	550	3,3	PANTH 72	K44 P	A80	NO	-	1" 1/2	4	NO

UPON REQUEST IT IS AVAILABLE WITH DIFFERENT VOLTAGES AND 60 HZ FREQUENCY

SELF SERVICE K44

DISPENSERS ACCESSORIES

MECHANICAL DISPENSER

CUBE	CODE	DESCRIPTION
	F0893000A	KIT QUICK COUPLING 2IN X 1IN
	F1270800C	KIT PEDESTAL CUBE BLACK
	F1273700A	WALL KIT CUBE
	F1273800A	KIT PADLOCK CUBE MC
	F17163000	2" BSP DRUM CONNECTOR WITH VALVE

F1270800C

F1273700A

R08930000

R12738000

F17163000

MC
PIUSI
ON
OFF
OIL & FUEL FILTER
CF100

KITS

EX50 DRUM

FEATURES

- STURDY STRUCTURE
- FLANGED COMPONENTS
- ANTI-NOISE FILTER
- THERMAL PROTECTION
- BUILT-IN BYPASS VALVE
- SUCTION PIPE WITH INTEGRATED FILTER
- UL LISTED VERSION AVAILABLE

The PIUSI EX50 DRUM is a complete pump transfer kit expressly engineered for ATEX/IECEx areas. This system is composed of a high-efficiency pump, manual or automatic nozzle and a telescopic suction hose. Thanks to the flanged components, this transfer set allows users to replace any component without using sealants thus creating maximum versatility and adaptability to any kind of condition. K33 mechanical meter available on request.

Atex II 2 G

On request

PIUSI EX50 DRUM WITH METER AND FILTER

PERFORMANCE

UP TO 50 L/MIN	1100 MM
FLOW RATE	SUCTION PIPE
±1%	200β/30μ
ACCURACY	FILTERING CAPACITY

EX50 DRUM WITH AUTOMATIC NOZZLE

EX50 DRUM WITH AUTOMATIC NOZZLE

OUR PUMPS COMPLIES WITH THE FOLLOWING MARKING ATEX/IECEx

II	2	G	Ex	d	IIA	T4	Gb
GROUP	CATEGORY	TYPE OF EXPLOSIVE ATMOSPHERE	PERMANENT PREFIX	PROTECTION METHOD	GAS GLASS	TEMPERATURE CLASS	EQUIPMENT PROTECTION LEVEL

PACKAGING

CODE	WEIGHT		PACKAGING		
	KG	LBS	MM	INCH	PCS/BOX
WITHOUT METER					
F0037200O	10	22	600X400X290	23,6X13,7X11,4	1
F0037201O	10	22	600X400X290	23,6X13,7X11,4	1
F0037202O	7,9	17,4	345X175X225	-	1
F0037203O	10	22	600X400X290	23,6X13,7X11,4	1
F0037204O	10	22	600X400X290	23,6X13,7X11,4	1
F0037400A	10	22	600X400X290	23,6X13,7X11,4	1
F0037401A	10	22	600X400X290	23,6X13,7X11,4	1
F0037402A	7,9	17,4	345X175X225	-	1
WITH METER					
F0037500A	12	22	600X400X290	23,6X13,7X11,4	1
F0037501A	12	22	600X400X290	23,6X13,7X11,4	1
F0037502A	12	22	600X400X290	23,6X13,7X11,4	1
F0037503A	12	22	600X400X290	23,6X13,7X11,4	1
F0037600B	12	22	600X400X290	23,6X13,7X11,4	1
F0037601B	12	22	600X400X290	23,6X13,7X11,4	1

ANY BIODIESEL · AIR · ANTIFREEZE · AdBlue® · BIODIESEL · DIESEL · FOOD · GASOLINE · GREASE · KEROSENE · OIL · WATER · WINDSCREEN

CHART

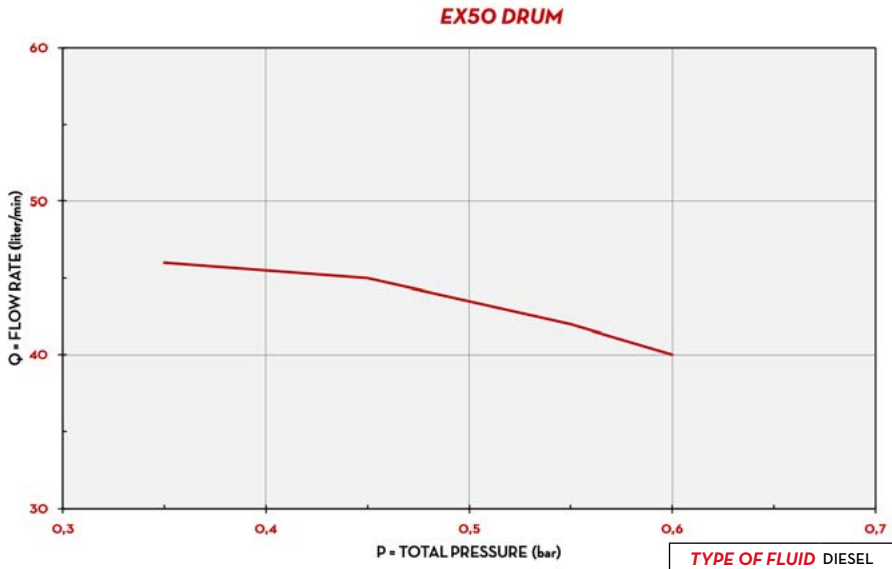

TYPE OF FLUID	DIESEL
TEMPERATURE	20/23°C

IN THE BOX

- EX50 PUMP
- TELESCOPIC SUCTION PIPE
- DELIVERY HOSE
- WATER CAPTOR FILTER
- A60 ATEX NOZZLE
- 2" CONNECTOR
- K33 ATEX METER (ON SELECTED VERSION)
- INSTRUCTION MANUAL

DETAILS

2" CONNECTOR

INTEGRATED FILTER

BENDING PROTECTION

DIMENSIONS

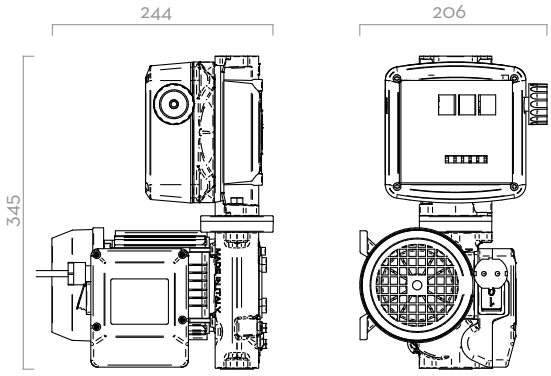

Dimensions expressed in millimeters

COMPONENTS

- PUMP:
  EX50 PAG. 90
- METER:
  K33 ATEX PAG. 130
- NOZZLE:
  A60 ATEX PAG. 158
  SELF3000 PAG. 164
- FILTER:
  WATER CAPTOR PAG. 172

TECHNICAL DATA

CODE	DESCRIPTION	FLUIDS TYPE	FLOW RATE		VOLTAGE			METER	NOZZLE	FILTER	INLET	HOSE	
			L/MIN	GPM	AC V./HZ DC VOLT	POWER WATT	AMP. MAX.	TYPE	TYPE		BSP	LENGTH MM	Ø BSP
WITHOUT METER													
F00372000	DRUM EX50 12V DC ATEX + MAN. NOZZLE	D G K	50	13	12	250	21	-	SELF3000	YES	1"	4	3/4"
F00372010	DRUM EX50 12V DC ATEX + AUT. NOZZLE	D G K	50	13	12	250	21	-	A60	YES	1"	4	3/4"
F00372020	KIT DRUM EX50 12V DC ATEX	D G K	50	13	12	250	21	-	NO	NO	1"	-	-
F00372030	DRUM EX50 12V DC ATEX + MAN. NOZZLE + CABLE	D G K	50	13	12	250	21	-	SELF3000	YES	1"	4	3/4"
F00372040	DRUM EX50 12V DC ATEX + AUT. NOZZLE + CABLE	D G K	50	13	12	250	21	-	A60	YES	1"	4	3/4"
F0037400A	DRUM EX50 230V ATEX + MAN. NOZZLE	D G K	50	13	230/50-60	250	1	-	SELF3000	YES	1"	4	3/4"
F0037401A	DRUM EX50 230V ATEX + AUT. NOZZLE	D G K	50	13	230/50-60	250	1	-	A60	YES	1"	4	3/4"
F0037402A	KIT DRUM EX50 230V ATEX	D G K	50	13	230/50-60	250	1	-	NO	NO	1"	-	-
WITH METER													
F0037500A	DRUM EX50 12V DC K33 ATEX + MAN. NOZZLE	D G K	50	13	12	250	21	K33	SELF3000	YES	1"	4	3/4"
F0037501A	DRUM EX50 12V DC K33 ATEX + AUT. NOZZLE	D G K	50	13	12	250	21	K33	A60	YES	1"	4	3/4"
F0037502A	DRUM EX50 12V DC K33 ATEX + MAN. NOZZLE + CABLE	D G K	50	13	12	250	21	K33	SELF3000	YES	1"	4	3/4"
F0037503A	DRUM EX50 12V DC K33 ATEX + AUT. NOZZLE + CABLE	D G K	50	13	12	250	21	K33	A60	YES	1"	4	3/4"
F0037600B	DRUM EX50 230V K33 ATEX + MAN. NOZZLE	D G K	50	13	230/50-60	250	1	K33	SELF3000	YES	1"	4	3/4"
F0037601B	DRUM EX50 230V K33 ATEX + AUT. NOZZLE	D G K	50	13	230/50-60	250	1	K33	A60	YES	1"	4	3/4"

( ) UPON REQUEST IT IS AVAILABLE WITH DIFFERENT VOLTAGES AND 60 HZ FREQUENCY. COMPATIBLE FLUIDS: DIESEL, KEROSENE, PETROL, PETROL ALCOHOL MIXED MAX 15%, AVGAS 100/100LL (ONLY PUMP&METER), JET A/A1 (ONLY PUMP&METER), ASPEN 2/4

EX50 DRUM

EX100 DRUM

FEATURES

- CONTINUOUS DUTY
- THERMAL PROTECTION
- SUCTION UNIT WITH INTEGRATED FILTER
- BUILT-IN BYPASS VALVE
- UL VERSION AVAILABLE

PIUSI EX100 DRUM is the new transfer kit for flammable fluids that is characterized by a high flow rate and works with a continuous duty cycle. Simple to use, compact, versatile, it adapts to any working conditions: you can use it wherever you need it most. The PIUSI EX100 DRUM is ATEX certified and complies with the directives on the use of materials in potentially explosive atmospheres.

Atex II 2 G

On request

PERFORMANCE

UP TO 100 L/MIN	AC VOLTAGE
FLOW RATE	POWER

EX100 DRUM /A140/K150/5MT

EX100 DRUM /A140/ 5MT

OUR PUMPS COMPLIES WITH THE FOLLOWING MARKING ATEX/IECEx

II	2	G	Ex	d	IIA	T4	Gb
GROUP	CATEGORY	TYPE OF EXPLOSIVE ATMOSPHERE	PERMANENT PREFIX	PROTECTION METHOD	GAS GLASS	TEMPERATURE CLASS	EQUIPMENT PROTECTION LEVEL

PACKAGING

CODE	WEIGHT		PACKAGING		
	KG	LBS	MM	INCH	PCS/BOX
F00391010	25	55	240X400X350	10X16X15	1
F00391020	25	55	240X400X350	10X16X15	1
F00391300	30	66	400X600X430	16X24X17	1
F00391320	30	66	400X600X430	16X24X17	1
F00391340	30	66	400X600X430	16X24X17	1
F00391310	32	70	400X600X430	16X24X17	1
F00391330	32	70	400X600X430	16X24X17	1
F00391350	32	70	400X600X430	16X24X17	1

ANY BIODIESEL · AIR · ANTIFREEZE · AdBlue® · BIODIESEL · DIESEL · FOOD · GASOLINE · GREASE · KEROSENE · OIL · WATER · WINDSCREEN

CHART

EX100 DRUM

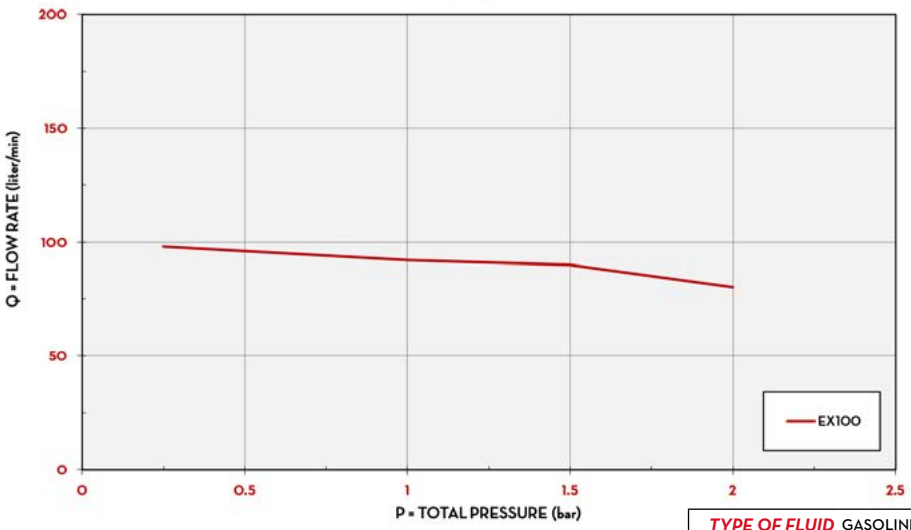

TYPE OF FLUID	GASOLINE
TEMPERATURE	20°C

IN THE BOX

- EX100 PUMP
- NOZZLE HOLDER
- 2" TANK CONNECTOR
- 90° FLANGED ELBOW
- K150 ATEX METER (ON SELECTED VERSION)
- A140 ATEX AUTOMATIC NOZZLE (ON SELECTED VERSION)
- DELIVERY HOSE (ON SELECTED VERSION)
- INSTRUCTION MANUAL

DETAILS

MESH STRAINER

2" TANK CONNECTOR

90° FLANGED ELBOW

BENDING PROTECTION

DIMENSIONS

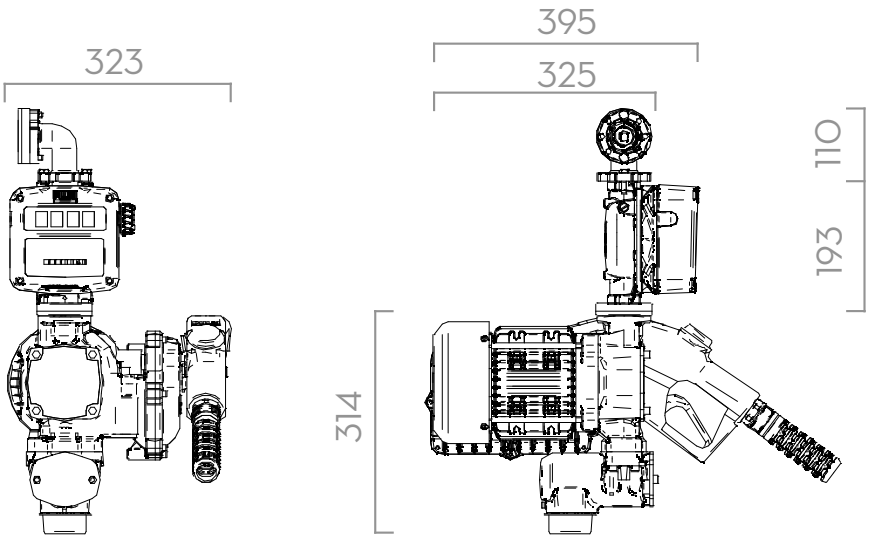

Dimensions expressed in millimeters

COMPONENTS

- PUMP:
  EX100 PAG. 92
- METER:
  K150 ATEX PAG. 132
- NOZZLE:
  A140 ATEX PAG. 158

TECHNICAL DATA

CODE	DESCRIPTION	FLUIDS TYPE	FLOW RATE		VOLTAGE			DUTY CICLE	INLET	OUTLET	METER	DELIVERY HOSE	BENDING PRO-TECTION	ULTRA HI-FLOW AUTO NOZZLE
			L/MIN	GPM	AC V./HZ	POWER WATT	AMP. MAX.	CONTINUOUS						
F00391010	(EX) EX100 DRUM 230V/50HZ (PUMP ONLY)	D G K	100	25	230/50	1035	4,5	YES	2" BSP	1" BSP	-	-	-	-
F00391020	(EX) EX100 DRUM 230V/60HZ (PUMP ONLY)	D G K	100	25	230/60	874	3,8	YES	2" BSP	1" BSP	-	-	-	-
F00391300	(Ex) EX100 DRUM 230/50 /A140/5MT	D G K	100	25	230/50	1035	4,5	YES	2" BSP	1" BSP	-	D.25 5MT	YES	A140
F00391320	(EX) EX100 DRUM 230/60 /A140/5MT	D G K	100	25	230/60	874	3,8	YES	2" BSP	1" BSP	-	D.25 5MT	YES	A140
F00391340	(EX) EX100 DRUM 250/50 /A140/5MT	D G K	100	25	250/50	1125	4,5	YES	2" BSP	1" BSP	-	D.25 5MT	YES	A140
F00391310	(EX) EX100 DRUM 230/50 /A140/K150/5MT	D G K	100	25	230/50	1035	4,5	YES	2" BSP	1" BSP	K150	D.25 5MT	YES	A140
F00391330	(EX) EX100 DRUM 230/60 /A140/K150/5MT	D G K	100	25	230/60	874	3,8	YES	2" BSP	1" BSP	K150	D.25 5MT	YES	A140
F00391350	(EX) EX100 DRUM 250/50 /A140/K150/5MT	D G K	100	25	250/50	1125	4,5	YES	2" BSP	1" BSP	K150	D.25 5MT	YES	A140

( ) UPON REQUEST IT IS AVAILABLE WITH DIFFERENT VOLTAGES AND 60 HZ FREQUENCY. COMPATIBLE FLUIDS: DIESEL, KEROSENE, PETROL, PETROL ALCOHOL MIXED MAX 15%, AVGAS 100/100LL, JET A/A1 - ASPEN 2/4

EX100 DRUM

EX140 DRUM

FEATURES

- CONTINUOUS DUTY
- THERMAL PROTECTION
- SUCTION UNIT WITH INTEGRATED FILTER
- BUILT-IN BYPASS VALVE
- UL VERSION AVAILABLE

The entire new EX line is characterized by a high flow rate that works with a continuous duty cycle, and has been designed to be particularly suitable for Heavy Duty, i.e.for those demanding fleets that need to dispense fuels such as Gasoline, diesel or kerosene quickly.
The PIUSI EX140 DRUM is ATEX certified and complies with the directives on the use of materials in potentially explosive atmospheres.

Atex II 2 G

On request

PERFORMANCE

UP TO 140 L/MIN	AC VOLTAGE
FLOW RATE	POWER

EX140 DRUM /A140/K150/5MT

EX140 DRUM /A140/5MT

OUR PUMPS COMPLIES WITH THE FOLLOWING MARKING ATEX/IECEx

II	2	G	Ex	d	IIA	T4	Gb
GROUP	CATEGORY	TYPE OF EXPLOSIVE ATMOSPHERE	PERMANENT PREFIX	PROTECTION METHOD	GAS GLASS	TEMPERATURE CLASS	EQUIPMENT PROTECTION LEVEL

PACKAGING

CODE	WEIGHT		PACKAGING		
	KG	LBS	MM	INCH	PCS/BOX
F00396010	25	55	240X400X350	10X16X15	1
F00396030	25	55	240X400X350	10X16X15	1
F00396020	25	55	240X400X350	10X16X15	1
F00396300	30	66	400X600X430	16X24X17	1
F00396320	30	66	400X600X430	16X24X17	1
F00396340	30	66	400X600X430	16X24X17	1
F00396310	32	70	400X600X430	16X24X17	1
F00396330	32	70	400X600X430	16X24X17	1
F00396350	32	70	400X600X430	16X24X17	1

ANY BIODIESEL | AIR | ANTIFREEZE | AdBlue® | BIODIESEL | DIESEL | FOOD | GASOLINE | GREASE | KEROSENE | OIL | WATER | WINDSCREEN

CHART

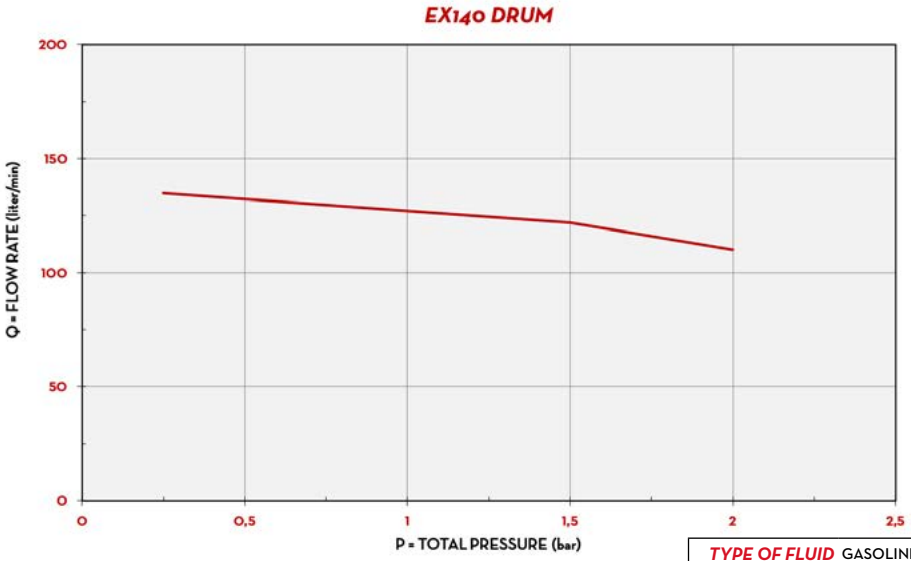

TYPE OF FLUID	GASOLINE
TEMPERATURE	20°C

IN THE BOX

- EX140 PUMP
- NOZZLE HOLDER
- 2" CONNECTOR
- 90° FLANGED ELBOW
- K150 ATEX METER (ON SELECTED VERSION)
- A140 ATEX AUTOMATIC NOZZLE (ON SELECTED VERSION)
- DELIVERY HOSE (ON SELECTED VERSION)
- INSTRUCTION MANUAL

DETAILS

MESH STRAINER

2" TANK CONNECTOR

90° FLANGED ELBOW

BENDING PROTECTION

DIMENSIONS

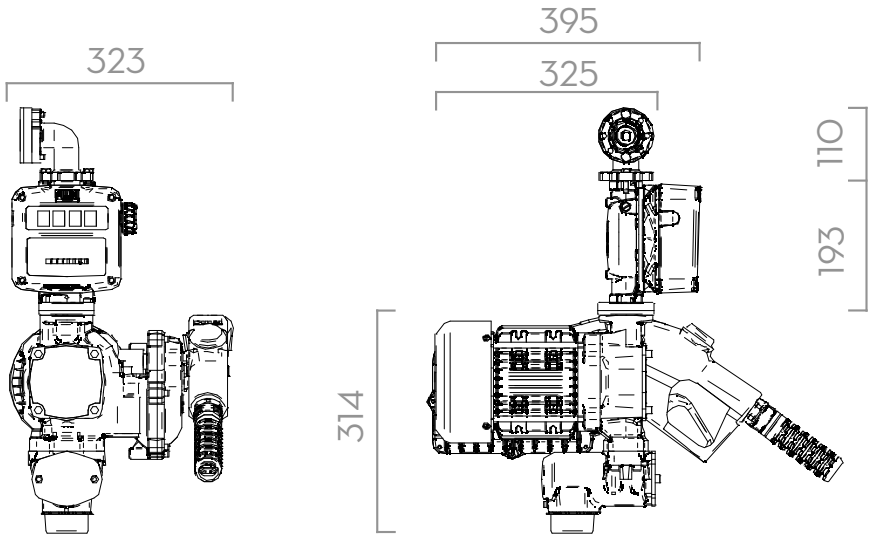

Dimensions expressed in millimeters

COMPONENTS

- PUMP:
  EX140 PAG. 94
- METER:
  K150 ATEX PAG. 132
- NOZZLE:
  A140 ATEX PAG. 158

TECHNICAL DATA

CODE	DESCRIPTION	FLUIDS TYPE	FLOW RATE		VOLTAGE			DUTY CICLE	INLET	OUTLET	METER	DELIVERY HOSE	BENDING PRO-TECTION	ULTRA HI-FLOW AUTO NOZZLE
			L/MIN	GPM	AC V./HZ	POWER WATT	AMP. MAX.	CONTINUOUS						
F00396010	(EX) EX140 DRUM 230V/50HZ (PUMP ONLY)	D G K	140	37	230/50	1150	5	YES	2" BSP	1" BSP	-	-	-	-
F00396030	(EX) EX140 DRUM 230V/60HZ (PUMP ONLY)	D G K	140	37	230/60	920	4	YES	2" BSP	1" BSP	-	-	-	-
F00396020	(EX) EX140 DRUM 250V/50HZ (PUMP ONLY)	D G K	140	37	250/50	1125	4,5	YES	2" BSP	1" BSP	-	-	-	-
F00396300	(Ex) EX140 DRUM 230/50 /A140/5MT	D G K	140	37	230/50	1150	5	YES	2" BSP	1" BSP	-	D.25 5MT	YES	A140
F00396320	(EX) EX140 DRUM 230/60 /A140/5MT	D G K	140	37	230/60	920	4	YES	2" BSP	1" BSP	-	D.25 5MT	YES	A140
F00396340	(EX) EX140 DRUM 250/50 /A140/5MT	D G K	140	37	250/50	1125	4,5	YES	2" BSP	1" BSP	-	D.25 5MT	YES	A140
F00396310	(EX) EX140 DRUM 230/50 /A140/K150/5MT	D G K	140	37	230/50	1150	5	YES	2" BSP	1" BSP	K150	D.25 5MT	YES	A140
F00396330	(EX) EX140 DRUM 230/60 /A140/K150/5MT	D G K	140	37	230/60	920	4	YES	2" BSP	1" BSP	K150	D.25 5MT	YES	A140
F00396350	(EX) EX140 DRUM 250/50 /A140/K150/5MT	D G K	140	37	250/50	1125	4,5	YES	2" BSP	1" BSP	K150	D.25 5MT	YES	A140

( ) UPON REQUEST IT IS AVAILABLE WITH DIFFERENT VOLTAGES AND 60 HZ FREQUENCY. COMPATIBLE FLUIDS: DIESEL, KEROSENE, PETROL, PETROL ALCOHOL MIXED MAX 15%, AVGAS 100/100LL, JET A/A1 - ASPEN 2/4

EX140 DRUM

EX50 ST

FEATURES

- STURDY STRUCTURE
- COMPACT, VERSATILE
- EASY TO INSTALL
- ANTI-NOISE FILTER
- OVERLOAD PROTECTION

The PIUSI EX50 ST is a sturdy and compact transfer station equipped with an ACEX/IECEx certified pump suitable for the transfer of all flammable liquids. These transfer stations are the final solution for all applications in which mobile or underground tanks need to be equipped with a dispenser unit. Thanks to the flanged components, this transfer set allows users to replace any component without using sealants.

Atex
II 2 G

On request

PERFORMANCE

UP TO 50 L/MIN	AC VOLTAGE
FLOW RATE	POWER
±1%	
ACCURACY	

PIUSI ST EX50 WITH METER AND NOZZLE
F00377000

PIUSI ST EX50 WITH METER AND NOZZLE
F00377010

OUR PUMPS COMPLY WITH THE FOLLOWING MARKING ATEX/IECEx

II	2	G	Ex	d	IIA	T4	Gb
GROUP	CATEGORY	TYPE OF EXPLOSIVE ATMOSPHERE	PERMANENT PREFIX	PROTECTION METHOD	GAS GLASS	TEMPERATURE CLASS	EQUIPMENT PROTECTION LEVEL

PACKAGING

CODE	WEIGHT		PACKAGING		
	KG	LBS	MM	INCH	PCS/BOX
WITH METER					
F00377000	12	24,5	600X400X290	23,6X13,7X11,4	1
F00377010	12	24,5	600X400X290	23,6X13,7X11,4	1

ANY BIODIESEL · AIR · ANTIFREEZE · AdBlue® · BIODIESEL · DIESEL · FOOD · GASOLINE · GREASE · KEROSENE · OIL · WATER · WINDSCREEN

CHART

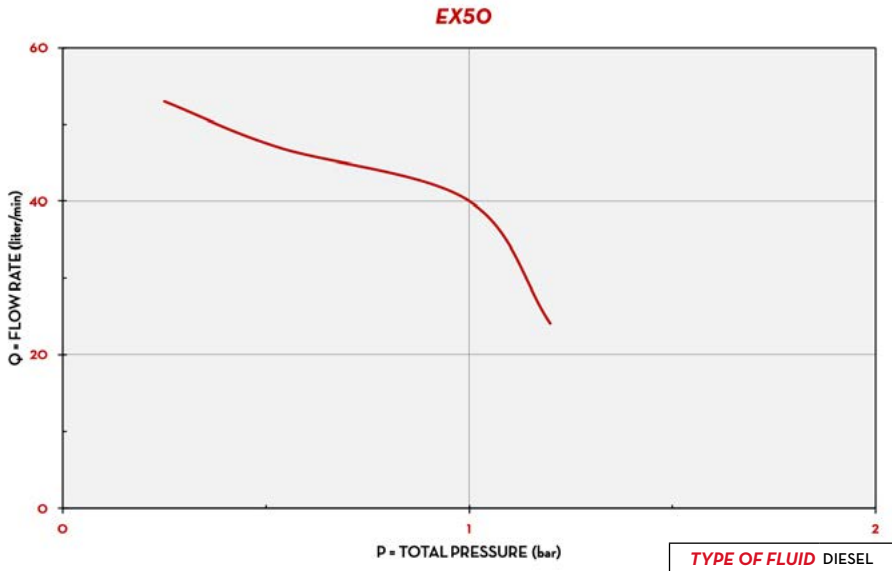

TYPE OF FLUID	DIESEL
TEMPERATURE	2

IN THE BOX

- EX50 PUMP
- METALLIC PLATE
- GASOLINE HOSE
- FILTER
- NOZZLE
- K33 MECHANICAL METER
- INSTRUCTION MANUAL

DETAILS

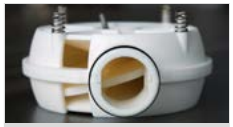

NUTATING DISK SYSTEM

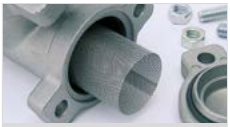

MESH STRAINER

DIMENSIONS

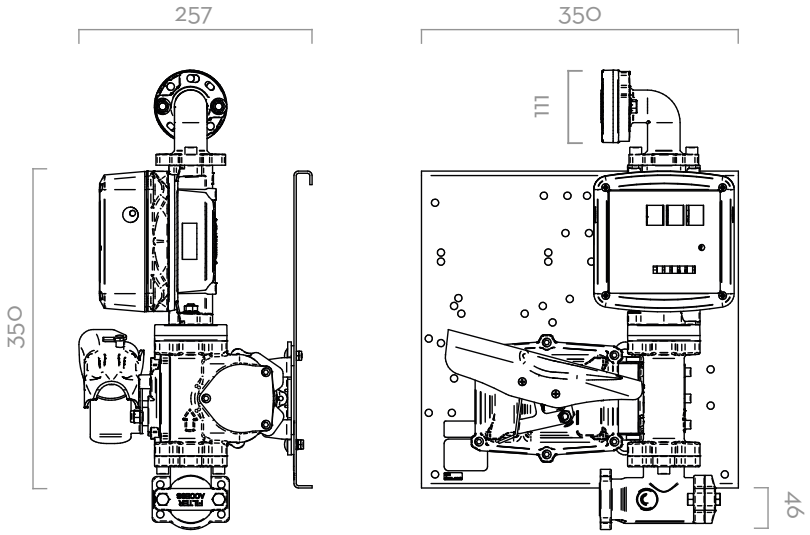

Dimensions expressed in millimeters

COMPONENTS

- PUMP:
  EX50 PAG. 90
- METER:
  K33 ATEX PAG. 130
- NOZZLE:
  A60 ATEX PAG. 158

TECHNICAL DATA

CODE	DESCRIPTION	FLUIDS TYPE	FLOW RATE		VOLTAGE			METER	NOZZLE	FILTER	INLET	HOSE	
			L/MIN	GPM	AC V./HZ DC VOLT	POWER WATT	AMP. MAX.	TYPE	TYPE		BSP	LENGTH MM	Ø BSP
WITH METER													
F00377000	ST EX50 230V K33 ATEX + AUT. NOZZLE	D G K	50	13	230/50-60	250	21	K33	AUT.	-	1"	4	3/4"
F00377010	ST EX50 230V K33 ATEX + AUT. NOZZLE (RU VERSION)	D G K	50	13	230/50-60	250	21	K33	AUT.	-	1"	4	3/4"

( ) UPON REQUEST IT IS AVAILABLE WITH DIFFERENT VOLTAGES AND 60 HZ FREQUENCY. COMPATIBLE FLUIDS: DIESEL, KEROSENE, PETROL, PETROL ALCOHOL MIXED MAX 15%, AVGAS 100/100LL (ONLY PUMP&METER), JET A/A1 (ONLY PUMP&METER) - ASPEN 2/4

EX50 ST

DRUM

FEATURES

- EASY TO INSTALL
- SUITABLE FOR ALL DRUMS
- DIFFERENT PUMPS FOR ANY NEED
- AC/DC VERSIONS

The PIUSI DRUM is a compact fuel transfer unit suitable to be connected on drums thanks to the quick 2" coupling. Available with different pumps, the system is (always) equipped with a telescopic suction hose and the nozzle holder located above the drum, near the pump, for easy, clean and safe operations. K33 mechanical meter available on request.

PERFORMANCE

UP TO 80 L/MIN FLOW RATE	AC/DC VOLTAGE POWER
± 1% ACCURACY	

DRUM PANTHER 56 K33

DRUM BIPUMP 12V

PACKAGING

CODE		WEIGHT		PACKAGING		
WITHOUT METER	WITH METER	KG	LBS	MM	INCH	PCS/BOX
000271P00	000272P00	13,5	29,8	480X370X265	18,3X14,6X10,4	1
000273P00	000274P00	14,4	31,7	480X370X265	18,3X14,6X10,4	1
F0022201A	F0022205A	20,7	45,6	480X370X265	18,3X14,6X10,4	1
F0022202A	F0022206A	20,7	45,6	480X370X265	18,3X14,6X10,4	1
F0022203A	F0022207A	21,6	47,6	480X370X265	18,3X14,6X10,4	1
F0022204A	F0022208A	21,6	47,6	480X370X265	18,3X14,6X10,4	1
-	F0034111C	14,7	31,7	480X370X265	18,3X14,6X10,4	1

CHART

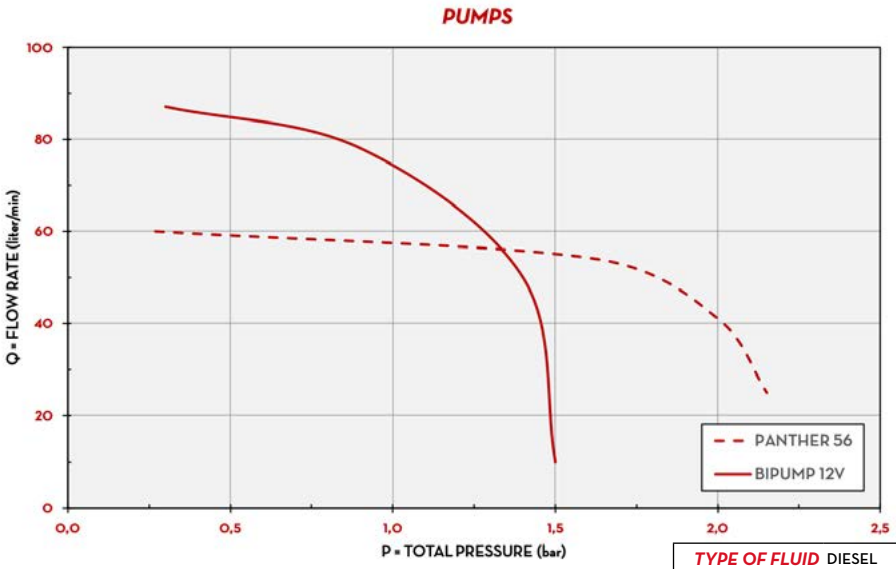

TYPE OF FLUID	DIESEL
TEMPERATURE	10°C

IN THE BOX

- PUMP
- TELESCOPIC SUCTION PIPE
- DELIVERY HOSE
- NOZZLE
- 2" CONNECTOR
- K33 MECHANICAL METER (ON REQUEST)
- INSTRUCTION MANUAL

DETAILS

2" CONNECTOR

TELESCOPIC SUCTION HOSE

ELECTRIC CABLE WITH CLAMPS (ONLY DC VERSION)

DIMENSIONS

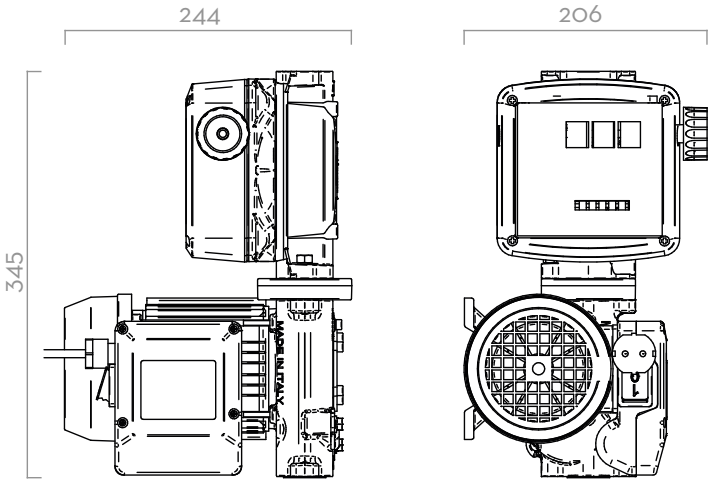

Dimensions expressed in millimeters

COMPONENTS

- PUMPS:

PANTHER AC	PAG. 100
BIPUMP	PAG. 118
PANTHER DC	PAG. 116

- METER:

K33	PAG. 148

TECHNICAL DATA

CODE		DESCRIPTION	FLUIDS TYPE	FLOW RATE		VOLTAGE			METER	NOZZLE	INLET	HOSE
WITHOUT METER	WITH METER			L/MIN	GPM	AC V./HZ DC VOLT	POWER WATT	AMP. MAX.	TYPE	TYPE	BSP	LENGTH
000271P00	000272P00	DRUM PANTHER 56	D	56	15	230/50	350	3	K33	SELF2000	3/4"	4M
000273P00	000274P00	DRUM PANTHER 56 A60	D	56	15	230/50	350	3	K33	A60	3/4"	4M
F0022201A	F0022205A	DRUM BIPUMP 12V	D	80	21	12V	530	44	K33	SELF2000	1"	4M
F0022202A	F0022206A	DRUM BIPUMP 24V	D	80	21	24V	540	22,5	K33	SELF2000	1"	4M
F0022203A	F0022207A	DRUM BIPUMP 12V A120	D	80	21	12V	530	44	K33	A120	1"	4M
F0022204A	F0022208A	DRUM BIPUMP 24V A120	D	80	21	24V	540	22,5	K33	A120	1"	4M
-	F0034111C	DRUM PANTHER DC 24/12V K33 A60	D	56	15	24/12V	150	25/16A	K33	A60	3/4"	4M

PICO

FEATURES

- *READY TO USE*
- *TURBINE FLOW-METER (K24 VERSION ONLY)*
- *WEATHER PROOF MATERIALS*
- *STURDY DESIGN*

The PIUSI PICO is a dispensing unit suitable to transfer diesel and antifreeze. It includes a centrifugal pump ready to be fit on any kind of drum (vertical installation with built-in connection). K24 meter and automatic nozzle available on request.

PERFORMANCE

UP TO 35 L/MIN	AC/DC VOLTAGE
FLOW RATE	POWER
± 1%	
ACCURACY	

PACKAGING

CODE	WEIGHT		PACKAGING		
	KG	LBS	MM	INCH	PCS/BOX
WITH METER					
F00202020	4,8	10,6	360X360X180	14,2X14,2X7,1	1
F00202030	5,8	12,8	360X360X180	14,2X14,2X7,1	1
F00202060	4,8	10,6	360X360X180	14,2X14,2X7,1	1
F00202070	5,8	12,8	360X360X180	14,2X14,2X7,1	1
F00202100	4,8	10,6	360X360X180	14,2X14,2X7,1	1
F00202110	5,8	12,8	360X360X180	14,2X14,2X7,1	1
WITHOUT METER					
F00202000	4,8	10,6	360X360X180	14,2X14,2X7,1	1
F00202010	5,8	12,8	360X360X180	14,2X14,2X7,1	1
F00202040	4,8	10,6	360X360X180	14,2X14,2X7,1	1
F00202050	5,8	12,8	360X360X180	14,2X14,2X7,1	1
F00202080	4,8	10,6	360X360X180	14,2X14,2X7,1	1
F00202090	5,8	12,8	360X360X180	14,2X14,2X7,1	1

CHART

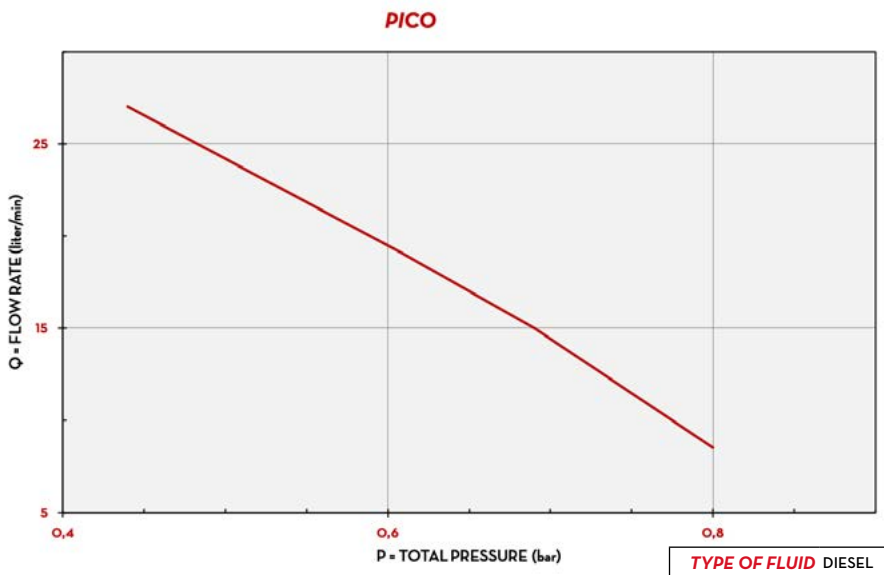

TYPE OF FLUID	DIESEL
TEMPERATURE	18°C

IN THE BOX

- PICO UNIT
- DELIVERY HOSE
- SUCTION PIPE
- MANUAL/AUTOMATIC NOZZLE
- METER (ON REQUEST)
- INSTRUCTION MANUAL

DETAILS

ON/OFF SWITCH

VERSION WITH METER

ELECTRIC CABLE WITH CLAMPS (ONLY DC VERSION)

DIMENSIONS

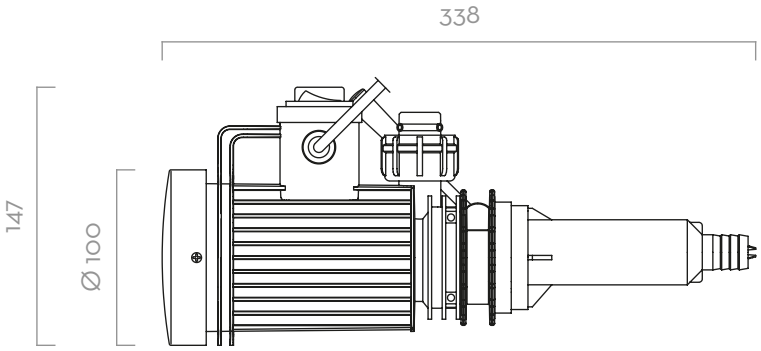

Dimensions expressed in millimeters

MATERIALS

- BODY: TECHNOPOLYMER
- TURBINES: TECHNOPOLYMER

TECHNICAL DATA

CODE	DESCRIPTION	FLUIDS TYPE	FLOW RATE		VOLTAGE			PUMP	DUTY CYCLE	NOZZLE	HOSE		FOOT FILTER
			L/MIN	GPM	AC V./HZ DC VOLT	POWER WATT	AMP. MAX.	TYPE	MINUTES	TYPE	LENGTH	Ø	
WITH METER													
F00202020	PICO 230 K24 M	A D W	35	9	230/50	224	1	PICO	-	MAN.	4M	3/4"	YES
F00202030	PICO 230 K24 A	A D W	30	8	230/50	224	1	PICO	-	AUT.	4M	3/4"	YES
F00202060	PICO 12 K24 M	A D W	30	8	12	110	9	PICO	30	MAN.	4M	3/4"	YES
F00202070	PICO 12 K24 A	A D W	25	7	12	110	9	PICO	30	AUT.	4M	3/4"	YES
F00202100	PICO 24 K24 M	A D W	30	8	24	135	5,5	PICO	30	MAN.	4M	3/4"	YES
F00202110	PICO 24 K24 A	A D W	25	7	24	135	5,5	PICO	30	AUT.	4M	3/4"	YES
WITHOUT METER													
F00202000	PICO 230 M	A D W	35	9	230/50	224	1	PICO	-	MAN.	4M	3/4"	YES
F00202010	PICO 230 A	A D W	30	8	230/50	224	1	PICO	-	AUT.	4M	3/4"	YES
F00202040	PICO 12 M	A D W	30	8	12	110	9	PICO	30	MAN.	4M	3/4"	YES
F00202050	PICO 12 A	A D W	25	7	12	110	9	PICO	30	AUT.	4M	3/4"	YES
F00202080	PICO 24 M	A D W	30	8	24	135	5,5	PICO	30	MAN.	4M	3/4"	YES
F00202090	PICO 24 A	A D W	25	7	24	135	5,5	PICO	30	AUT.	4M	3/4"	YES

BATTERY KIT

FEATURES

- *VERSATILITY*
- *MOBILE AND READY TO USE*
- *ON/OFF SWITCH*

The PIUSI BATTERY KIT is a portable transfer unit with a self-priming electric vane pump. Its modular composition allows users to have different pumps according to the required flow rates and different applications. It is equipped with a fixed brush motor with permanent magnet stator and terminal board with switches and fuses to protect against overload. It is always supplied with integrated nozzle and a set of accessories.

BIO diesel VERSION AVAILABLE

PERFORMANCE

UP TO 80 L/MIN — FLOW RATE	12/24V VOLTAGE — POWER
30 MIN — DUTY CICLE	UP TO 2MT — SELF-PRIMING

BATTERY KIT 3000

PACKAGING

CODE	WEIGHT		PACKAGING			N. BOXES / EUROPALLET	
	KG	LBS	MM	INCH	PCS/BOX	✈	🚢
BATTERY KIT 3000							
F0022500C	7,8	17,3	300X300X180	-	1	50	100
F0022600C	7,8	17,3	300X300X180	-	1	50	100
F0022541O	7,8	17,3	300X300X180	-	1	50	100
F0022638O	7,8	17,3	300X300X180	-	1	50	100
F0022580O	7,8	17,3	300X300X180	-	1	50	100
BATTERY KIT PANTHER							
F0034003B	7,8	17,3	300X300X180	-	1	24	36
F0034103C	7,8	17,3	300X300X180	-	1	24	36
F0034006B	12,5	27,6	330057X357X275	-	1	24	36
F0034122O	13	28,7	357X357X275	-	1	24	36
F0034106C	12,5,	27,6	357X357X275	-	1	24	36
BATTERY KIT BIPUMP							
F0036328O	18	39,7	480X370X265	-	1		
BATTERY KIT OIL							
F0030906O	7,8	17,3	300X300X180	-	1	50	100
F0031007O	7,8	17,3	300X300X180	-	1	50	100

ANY BIODIESEL | AIR | ANTIFREEZE | AdBlue® | BIODIESEL | DIESEL | FOOD | GASOLINE | GREASE | KEROSENE | OIL | WATER | WINDSCREEN

BATTERY KIT BIPUMP

BATTERY KIT 3000 INLINE

BATTERY KIT OIL

BATTERY KIT PANTHER

IN THE BOX

- PUMP
- SUCTION HOSE
- DELIVERY HOSE
- HANDLE
- NOZZLE
- MESH FILTER AND CONNECTIONS
- CABLES
- INSTRUCTION MANUAL

DETAILS

ON/OFF SWITCH

HANDLE

ELECTRIC CABLE WITH CLAMPS

DRUM KIT AVAILABLE

COMPONENTS

- DEPENDING ON PUMP MODEL, SEE REFERRED PAGES

TECHNICAL DATA

CODE	DESCRIPTION	FLUIDS TYPE	FLOW RATE		VOLTAGE			FUSES CAPACITY	PUMP		DUTY CYCLE	NOZZLE	HOSE		CHECK FILTER
			L/MIN	GPM	DC VOLT	POWER WATT	AMP. MAX.	AMPERE	TYPE		MINUTES	TYPE	LENGTH	Ø	
BATTERY KIT 3000															
F0022500C	BATTERY KIT 3000 12V	D	50	13	12	220	22	25	BP3000	CAT. FUEL PAG. 114	30	SELF 2000	4M	3/4"	YES
F0022600C	BATTERY KIT 3000 24V	D	50	13	24	310	13	15	BP3000	CAT. FUEL PAG. 114	30	SELF 2000	4M	3/4"	YES
F0022541O	BATTERY KIT 3000 INLINE 12V	D	50	13	12	220	22	25	BP3000	CAT. FUEL PAG. 114	30	SELF 2000	4M	3/4"	YES
F0022638O	BATTERY KIT 3000 INLINE 24V	D	50	13	24	310	13	15	BP3000	CAT. FUEL PAG. 114	30	SELF 2000	4M	3/4"	YES
F0022500O	BATTERY KIT 3000/12V B100	BIO D	50	13	12	220	22	25	BP3000 BIO	CAT. FUEL PAG. 114	30	SELF 2000 BIO	4M	3/4"	YES
BATTERY KIT PANTHER															
F0034003B	BATTERY KIT PANTHER 12V	D	56	15	12	300	35	40	PANTHER DC	CAT. FUEL PAG. 116	30	SELF 2000	4M	3/4"	YES
F0034103C	BATTERY KIT PANTHER 12-24V	D	35/70	9/18	24/12	420/150	25/16	30	PANTHER DC	CAT. FUEL PAG. 116	30	SELF 2000	4M	3/4"	YES
F0034006B	BATTERY KIT PANTHER 12V	D	56	15	12	420	35	40	PANTHER DC	CAT. FUEL PAG. 116	30	SELF 2000	5M	3/4"	YES
F0034122O	BATTERY KIT PANTHER 12-24V	D	35/70	9/18	12/24	600/200	25/16	30	PANTHER DC	CAT. FUEL PAG. 116	30	A60	5M	3/4"	YES
F0034106C	BATTERY KIT PANTHER 12-24V	D	35/70	9/18	12/24	600/200	25/16	30	PANTHER DC	CAT. FUEL PAG. 116	30	SELF 2000	5M	3/4"	YES
BATTERY KIT BIPUMP															
F0036328O	BATTERY KIT BIPUMP 12V	D	80	21	12	300	22	40	BIPUMP DC	CAT. FUEL PAG. 118	30	A120	6M	1"	YES
BATTERY KIT OIL															
F0030906O	BATTERY KIT VISCOMAT 12V	O	10	3	12	300	22	40	VISCOMAT DC	CAT. LUBE PAG. 38	30	SELF 3000	4M	3/4"	YES
F0031007O	BATTERY KIT VISCOMAT 24V	O	10	3	24	300	18	30	VISCOMAT DC	CAT. LUBE PAG. 38	30	SELF 3000	4M	3/4"	YES

BATTERY KIT

PITSTOP

FEATURES

- READY TO INSTALL
- VERSATILITY
- STURDY STRUCTURE

The PIUSI PITSTOP is a dispenser unit with two DC pumps, automatic hose reel, water filter and automatic nozzle with 14 meter. hose integrated into a sturdy supporting structure. Easy to install, versatile and compact, this dispenser is the all-in-one solution for setting up a perfect mobile refueling unit.

PERFORMANCE

UP TO 45 L/MIN FLOW RATE	12/24V VOLTAGE POWER
14MT HOSE LENGTH HOSE REEL	200β/30µ FILTERING CAPACITY

PITSTOP

PACKAGING

CODE	WEIGHT		PACKAGING		
	KG	LBS	MM	INCH	PCS/BOX
F00212000	45	99	595X465X670	23,4X13,5X24,4	1
F00213000	45	99	595X465X670	23,4X13,5X24,4	1

CHART

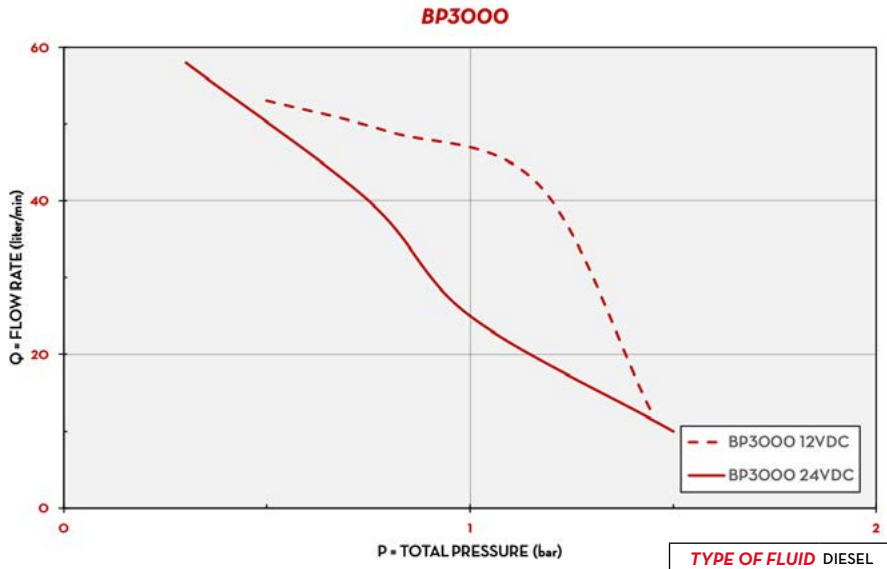

TYPE OF FLUID	DIESEL
TEMPERATURE	20#C

IN THE BOX

- PITSTOP UNIT
- AUTOMATIC NOZZLE
- FILTER
- INSTRUCTION MANUAL

DETAILS

ON/OFF SWITCH

PAD LOCK

BUILT-IN DC PUMPS

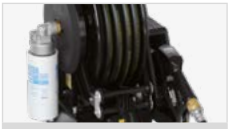
ADJUSTABLE ARM

DIMENSIONS

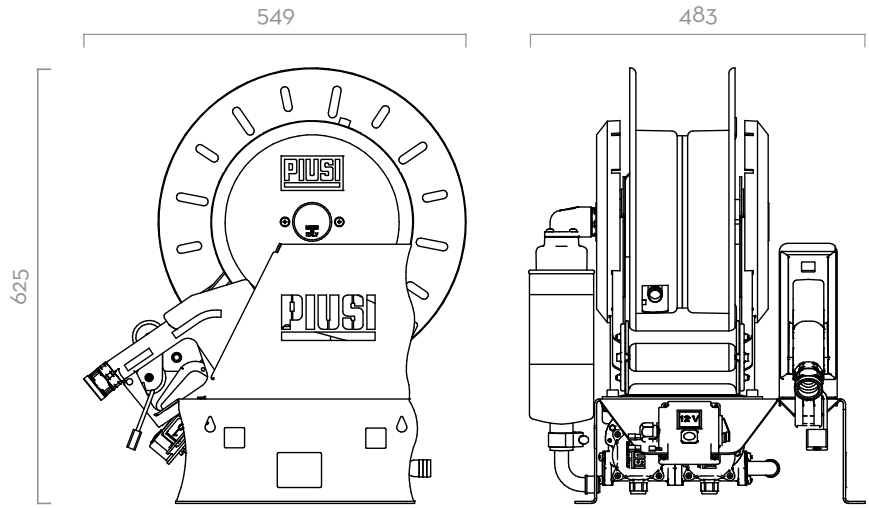

Dimensions expressed in millimeters

COMPONENTS

- PUMP:
  BP3000 PAG. 114
- FILTER:
  WATER CAPTOR PAG. 172
- NOZZLE:
  A60 PAG. 160

TECHNICAL DATA

CODE	DESCRIPTION	FLUIDS TYPE	FLOW RATE		VOLTAGE			PUMP		DUTY CYCLE	NOZZLE	HOSE		INLET
			L/MIN	GPM	AC V./HZ DC VOLT	POWER WATT	AMP. MAX.	TYPE	N°	MINUTES	TYPE	LENGTH	Ø	Ø
F00212000	PIUSI PITSTOP DC 12V	D	45	11,9	12	400	33	BP 3000	2	30	A60	14M	3/4"	1"
F00213000	PIUSI PITSTOP DC 24V	D	45	11,9	24	620	26	BP 3000	2	30	A60	14M	3/4"	1"

PIUSIBOX

FEATURES

- SELF PRIMING PUMP
- BUILT-IN FILTER (PRO VERSION)
- EASY TO REPACK
- IP55

The PIUSIBOX is a portable fuel dispenser integrated with a self-priming transfer pump, filter, check valve and manual nozzle. Suitable for quick and safe refuel operations in all the situations where an easy mobile refueling solution is required.

PERFORMANCE

UP TO 45 L/MIN	FLOW RATE
12/24V VOLTAGE	POWER
30 MIN	DUTY CICLE

PIUSIBOX

PACKAGING

CODE	WEIGHT		PACKAGING			N. BOXES / EUROPALLET	
	KG	LBS	MM	INCH	PCS/BOX	✈	🚢
F0023100B	9,5	20,9	400X300X420	-	1	24	32
F0023101B	12	26,5	400X300X420	-	1	24	32
F0023200B	9,5	20,9	400X300X420	-	1	24	32
F0023201B	12	26,5	400X300X420	-	1	24	32

CHART

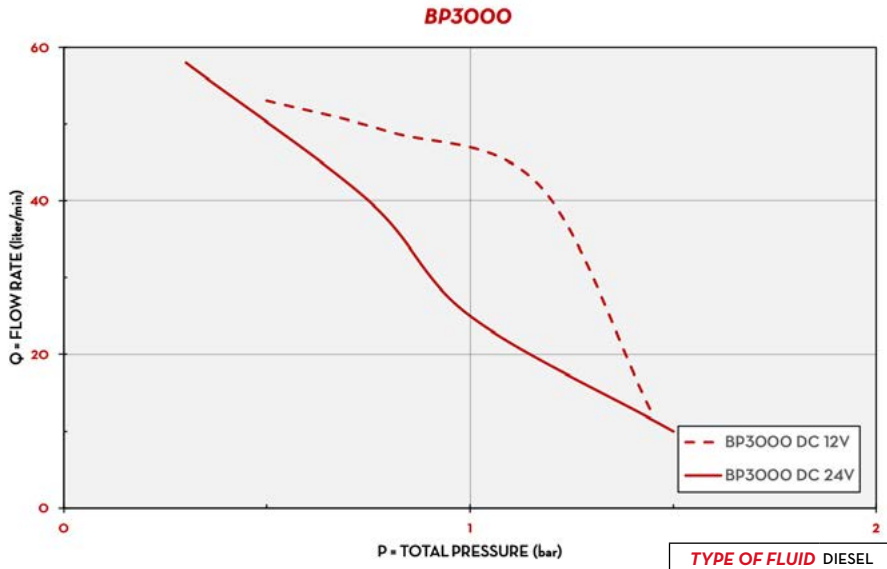

TYPE OF FLUID	DIESEL
TEMPERATURE	20°C

IN THE BOX

- PIUSIBOX UNIT
- SUCTION&DELIVERY HOSE
- OIL&FUEL FILTER (PRO VERSION)
- CHECK VALVE
- INSTRUCTION MANUAL

DETAILS

CHECK VALVE

ERGONOMIC HANDLE

ROTATING CONNECTION

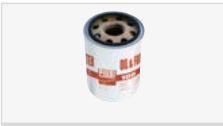
CARTRIDGE

DIMENSIONS

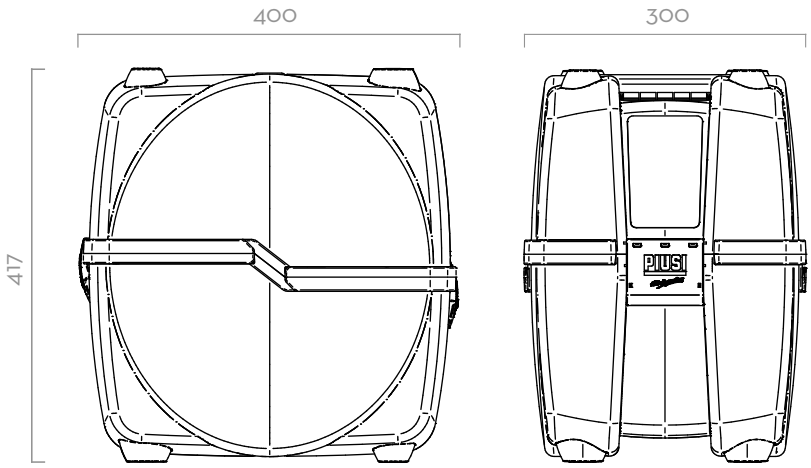

Dimensions expressed in millimeters

MATERIALS

- BODY: CAST IRON
- ROTOR: SINTERED STEEL
- VANES: ACETAL RESIN
- SEAL: NBR
- SHAFT: STEEL

TECHNICAL DATA

CODE	DESCRIPTION	FLUIDS TYPE	FLOW RATE		VOLTAGE			PUMP	DUTY CYCLE	FILTER	CARTRI-DGE	NOZZLE	DELIVERY HOSE 5/8"	SUCTION HOSE 3/4"	FOOT VALVE
			L/MIN	GPM	AC V./HZ DC VOLT	POWER WATT	AMP. MAX.	TYPE	MINUTES			TYPE			MOD. VANTAGE
F0023100B	PIUSIBOX 12V BASIC	D	45	11,9	12	400	33	BP 3000	30	NO	NO	MAN.	4M	2M	YES
F0023101B	PIUSIBOX 12V PRO	D	43	11,7	12	620	26	BP 3000	30	YES	10µ	MAN.	4M	2M	YES
F0023200B	PIUSIBOX 24V BASIC	D	45	11,9	24	400	33	BP 3000	30	NO	NO	MAN.	4M	2M	YES
F0023201B	PIUSIBOX 24V PRO	D	43	11,7	24	620	26	BP 3000	30	YES	10µ	MAN.	4M	2M	YES

CARRY

FEATURES

- EASY TO INSTALL
- SAFE TO MOVE
- LONG LASTING APPLICATION

The PIUSI CARRY pump is a diesel transfer DC pump designed to meet the needs of those who are looking for a long-lasting, high quality and portable pump. CARRY 3000 is equipped with a sturdy handle to allow easy carriage and comes complete with dispensing pipe, power cables and the dispensing nozzle.

PERFORMANCE

UP TO 70 L/MIN FLOW RATE	12/24V VOLTAGE POWER
30 MIN DUTY CICLE	

CARRY PANTHER

CARRY

CARRY 3000 INLINE

PACKAGING

CODE	WEIGHT		PACKAGING			N. BOXES / EUROPALLET	
	KG	LBS	MM	INCH	PCS/BOX	✈	🚢
F0022300C	4,2	9,3	260X235X164	-	1	84	120
F0022400C	4,2	9,3	260X235X164	-	1	84	120
F0022326O	4,2	9,3	260X235X164	-	1	84	120
F0022424O	4,2	9,3	260X235X164	-	1	84	120
F0034004B	4,2	9,3	260X235X164	-	1	84	120
F0034104C	4,2	9,3	260X235X164	-	1	84	120

CHART

TYPE OF FLUID	DIESEL
TEMPERATURE	20-22°C

IN THE BOX

- CARRY PUMP
- HANDLE
- ELECTRIC CABLE WITH CLAMPS
- CONNECTIONS
- INSTRUCTION MANUAL

DETAILS

STURDY HANDLE

ELECTRIC CABLE WITH CLAMPS

DIMENSIONS

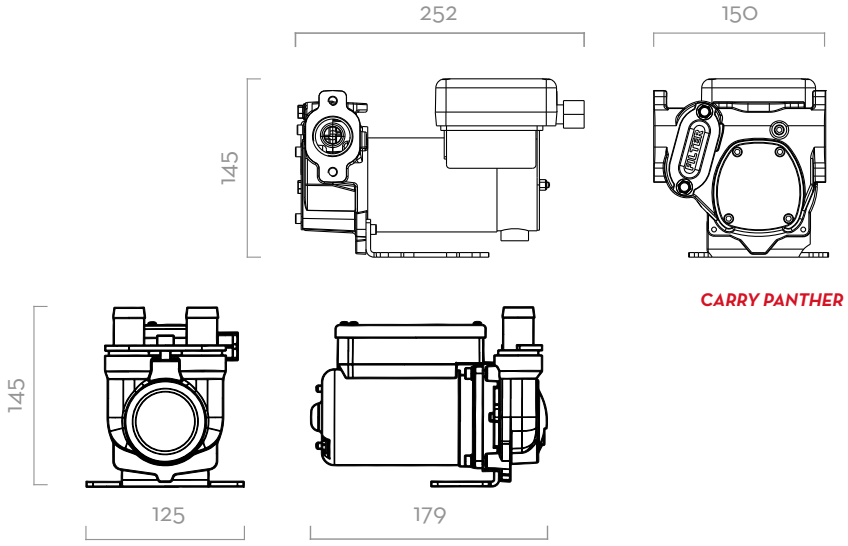

CARRY PANTHER

CARRY

Dimensions expressed in millimeters

MATERIALS

- BODY: CAST IRON
- ROTOR: SINTERED STEEL
- VANES: ACETAL RESIN
- SEAL: NBR
- SHAFT: STEEL

TECHNICAL DATA

CODE	DESCRIPTION	FLUIDS TYPE	FLOW RATE		VOLTAGE			FUSES CAPACITY	DUTY CICLE	RPM	PRESSURE MAX	ON/OFF SWITCH	INLET/OUTLET
			L/MIN	GPM	DC VOLT	POWER WATT	AMP. MAX.	AMPERE	MINUTES		BAR		BSP
F0022300C	CARRY 3000 12V	D	50	13	12	300	24	25	30	2900	1,5	YES	3/4"
F0022400C	CARRY 3000 24V / 12V	D	50/30	13/6	24/12	310/80	13/6,5	15	30	2900/1500	1,5	YES	3/4"
F0022326O	CARRY 3000 INLINE 12V	D	50	13	12	300	24	25	30	2900	1,5	YES	3/4"
F0022424O	CARRY 3000 INLINE 24V	D	50/30	13/6	24/12	310/80	24	15	30	2900/1500	1,5	YES	3/4"
F0034004B	CARRY PANTHER 12V	D	56	15	12	420	13/6,5	40	30	2900	-	YES	1"
F0034104C	CARRY PANTHER 12V / 24V	D	35/70	9/18	24/12	600/200	13/6,5	30	30	3500/1800	-	YES	1"

ST

FEATURES

- RADY TO USE
- EASY TO INSTALL
- STURDY STRUCTURE
- COMPACT DEISGN
- AVAILABLE WITH DIFFERENT PUMPS

The PIUSI ST is a versatile and compact diesel transfer station that can be used to fill mobile tanks or interact with distribution units. It is fitted with check valve, filter, nozzle and 4mt delivery hose. Its sturdy structure makes this dispenser suitable to be used in the harshest environments. It can be integrated with a protective metal box and water separating filter.

PERFORMANCE

UP TO 90 L/MIN FLOW RATE	AC/DC VOLTAGE POWER
4MT LENGTH DELIVERY HOSE	

ST

PACKAGING

CODE	WEIGHT		PACKAGING		
	KG	LBS	MM	INCH	PCS/BOX
000266P00	16	35	357X357X275	14,1X14,1X10,8	1
000286P00	16	35	357X357X275	14,1X14,1X10,8	1
000266P20	21	46	357X357X275	14,1X14,1X10,8	1
000214000	21	46	357X357X275	14,2X14,2X11,8	1
000216000	23	50	480X370X265	18,9X14,6X10,4	1
000252000	23	50	480X370X265	18,9X14,6X10,4	1
F0021000B	10	22	357X357X275	14,1X14,1X10,8	1
F0021100B	10	22	357X357X275	14,1X14,1X10,8	1
F00340080	19	42	357X357X275	14,1X14,1X10,8	1

AVAILABLE WITH DIFFERENT PUMPS

AC PUMP - PANTHER

AC PUMP - E80

AC PUMP - E120

AC PUMP - VISCOMAT VANE

DC PUMP - BP3000

DC PUMP - PANTHER DC

IN THE BOX

- ST UNIT
- DELIVERY HOSE
- NOZZLE
- NOZZLE HOLDER
- INSTRUCTION MANUAL

DETAILS

MANUAL NOZZLE

AUTOMATIC NOZZLE

DIMENSIONS

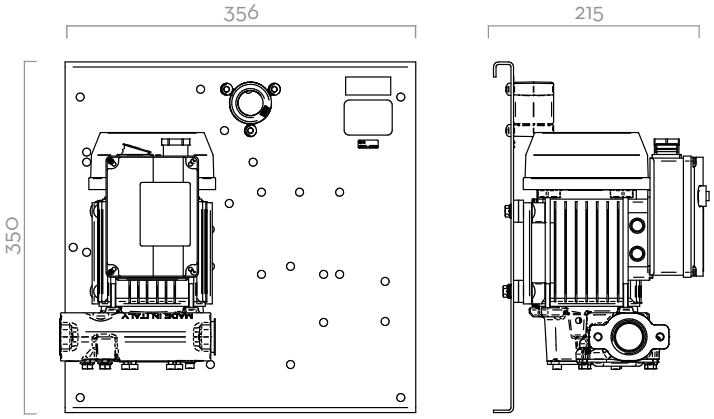

Dimensions expressed in millimeters

COMPONENTS

- PUMPS:
  - PANTHER AC PAG. 100
  - E80/E120 PAG. 104
  - VISCOMAT VANE PAG. 102
  - BP3000 PAG. 114
  - PANTHER DC PAG. 116
- NOZZLE:
  - MANUAL NOZZLE PAG. 164
  - AUTOMATIC NOZZLE PAG. 160

TECHNICAL DATA

CODE	DESCRIPTION	FLUIDS TYPE	FLOW RATE		VOLTAGE			METER	NOZZLE	FILTER	DELIVERY HOSE		OUTLET
			L/MIN	GPM	AC V./HZ DC VOLT	POWER WATT	AMP. MAX.	TYPE	TYPE	TYPE	LENGTH	Ø	bsp
000266P00	ST PANTHER 56	D	56	15	230/50	350	3	NO	SELF 3000	NO	4M	3/4"	1"
000286P00	ST PANTHER 56 A60	D	56	15	230/50	350	3	NO	A60	NO	4M	3/4"	1"
000266P20	ST PANTHER 72/M	D	72	19	230/50	500	4,2	NO	SELF 3000	NO	4M	3/4"	1"
000214000	ST E 80	D	80	21	230/50	700	3,5	NO	SELF 3000	NO	4M	1"	1"
000216000	ST E 120	D	90	24	230/50	1150	5,7	NO	SELF 3000	NO	4M	1"	1"
000252000	ST E 120 A120	D	90	24	230/50	1150	5,7	NO	A120	NO	4M	1"	1"
F0021000B	ST BYPASS 3000 12V	D	42	11	12	260	22	NO	SELF 3000	NO	4M	3/4"	1"
F0021100B	ST BYPASS 3000 24V	D	42	11	24	300	12	NO	SELF 3000	NO	4M	3/4"	1"
F00340080	ST PANTHER DC 12V	D	56	15	12	420	35	NO	SELF 3000	NO	4M	3/4"	1"

THE UNIT CAN ALSO BE SUPPLIED FOR OPERATING UNDER DIFFERENT VOLTAGES AND WITHOUT METER.

ST WITH METER

FEATURES

- READY TO USE
- EASY TO INSTALL
- STURDY STRUCTURE
- HIGH PRECISION METER
- AVAILABLE WITH DIFFERENT PUMPS

The PIUSI ST WITH METER is a diesel transfer station for fixed installations composed by AC or DC pump, nozzle (manual or automatic) and precision meter - both mechanical (K33) or electronic (K600 B/3) - for safe and controlled refueling operations. Easy to install, this station can be used to fill mobile tanks or interact with distribution units.

METALLIC BOX (optional)

ST WITH METER

PERFORMANCE

UP TO 90 L/MIN FLOW RATE	AC/DC VOLTAGE POWER
± 1% ACCURACY	4MT LENGTH DELIVERY HOSE

PACKAGING

CODE	WEIGHT		PACKAGING		
WITHOUT METAL BOX	KG	LBS	MM	INCH	PCS/BOX
F00385P0A	16	35	357X357X275	14,1X14,1X10,8	1
F00287P0A	16	35	357X357X275	14,1X14,1X10,8	1
000390000	21	46	357X357X275	14,1X14,1X10,8	1
000392000	23	50	357X357X275	14,2X14,2X11,8	1
000395000	23	50	480X370X265	18,9X14,6X10,4	1
000395050	24	53	480X370X275	18,9X14,6X11,8	1
000397000	20	44	480X370X265	18,9X14,6X10,4	1
000287P40	19	41	357X357X275	14,1X14,1X10,8	1
F0023500B	13	29	357X357X275	14,1X14,1X10,8	1
F0023600B	13	29	357X357X275	14,2X14,2X11,8	1
F0023300B	14	31	480X370X265	18,9X14,6X10,4	1
F0023400B	14	31	480X370X265	18,9X14,6X10,4	1
F0024000A	24	53	357X357X275	14,1X14,1X10,8	1
F0024003A	24	53	357X357X275	14,1X14,1X10,8	1
F0024100A	24	53	357X357X275	14,1X14,1X10,8	1
F0024101A	11	11	357X357X275	14,1X14,1X10,8	1
F00340070	17	37	357X357X275	14,1X14,1X10,8	1
F00340160	17	11	357X357X275	14,1X14,1X10,8	1

AVAILABLE WITH DIFFERENT PUMPS

AC PUMP - PANTHER 56/72

AC PUMP - E80/E120

AC PUMP - VISCOMAT 70/90

DC PUMP - BYPASS 3000

DC PUMP - PANTHER DC

DC PUMP - BIPUMP

IN THE BOX

- ST WITH METER UNIT
- METER
- DELIVERY HOSE
- NOZZLE
- NOZZLE HOLDER
- INSTRUCTION MANUAL

DETAILS

K33 / K600 B/3

MAN. / AUTOM. NOZZLE

DIMENSIONS

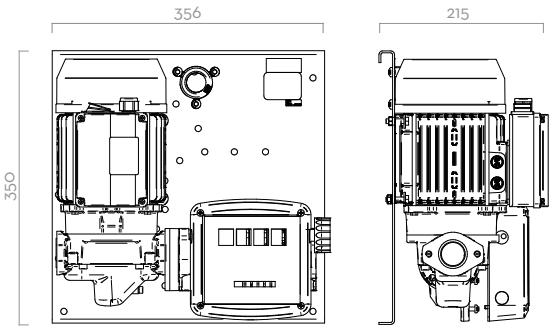

Dimensions expressed in millimeters

COMPONENTS

- PUMPS:
  - PANTHER AC PAG. 100
  - E80/E120 PAG. 104
  - VISCOMAT VANE PAG. 102
  - BP3000 PAG. 114
  - PANTHER DC PAG. 116
  - BIPUMP PAG. 118
- NOZZLE:
  - MANUAL NOZZLE PAG. 164
  - AUTOMATIC NOZZLE PAG. 160
- METERS:
  - K33 PAG. 148
  - K600 B/3 PAG. 138

TECHNICAL DATA

CODE	DESCRIPTION	FLUIDS TYPE	FLOW RATE		VOLTAGE			METER	NOZZLE	SUCTION HOSE	HOSE		OUTLET
			L/MIN	GPM	AC V./HZ DC VOLT	POWER WATT	AMP. MAX.	TYPE	TYPE		LENGTH (M)	Ø (MM)	bsp
F00385P0A	ST PANTHER 56 K33	D	56	15	230/50	350	3	K33	SELF 3000	NO	4	20	3/4"
F00287P0A	ST PANTHER 56 K33 A60	D	56	15	230/50	350	3	K33	A60	NO	4	20	3/4"
000390000	ST E80 K33	D	80	21	230/50	700	3,5	K33	SELF 3000	NO	4	25	1"
000392000	ST E80 K33 A80	D	75	20	230/50	700	3,5	K33	A80	NO	4	25	1"
000395000	ST E120 K33	D	90	24	230/50	1150	5,7	K33	SELF 3000	NO	4	25	1"
000395050	ST E120/M K44	D	90	24	230/50	1150	5,7	K44	SELF 3000	NO	4	25	1"
000397000	ST E120 K33 A120	D	90	24	230/50	1150	5,7	K33	A120	NO	4	25	1"
000287P40	ST PANTHER 72/M K33 A80	D	72	19	230/50	500	4,2	K33	A80	NO	4	25	1"
F0023500B	ST BYPASS 3000/12V K33	D	40	10	12	260	22	K33	SELF 3000	NO	4	20	3/4"
F0023600B	ST BYPASS 3000 INLINE 24V K33	D	40	10	24	300	12	K33	SELF 3000	NO	4	20	3/4"
F0023300B	ST BYPASS 3000/12V K33 A60	D	35	9	12	260	22	K33	A60	NO	4	20	3/4"
F0023400B	ST BYPASS 3000 INLINE 24V K33 A60	D	35	9	24	300	12	K33	A60	NO	4	20	3/4"
F0024000A	ST BIPUMP 12V K33 SELF 3000	D	80	21	12	530	44	K33	SELF 3000	NO	4	25	1"
F0024003A	ST BIPUMP 12V K33 A120	D	80	21	12	530	44	K33	A120	NO	4	25	1"
F0024100A	ST BIPUMP 24V K33 SELF 3000	D	80	21	24	540	22,5	K33	SELF 3000	NO	4	25	1"
F0024101A	ST BIPUMP 24V K33 A120	D	80	21	24	540	22,5	K33	A120	NO	4	25	1"
F00340070	ST PANTHER 12V K33 A60	D	56	15	12	420	35	K33	A60	NO	4	20	3/4"
F00340160	ST PANTHER DC 12/24V K33 A60	D	70/35	18,5/9,2	24/12	420/150	25/16	K33	A60	NO	4	20	3/4"

ST WITH METER

ST WITH METER AND FILTER

FEATURES

- READY TO USE
- VERSATILE
- EASY TO INSTALL
- COMPACT DESIGN
- FILTRATION GUARANTEED
- AVAILABLE WITH DIFFERENT PUMPS

PIUSI ST WITH METER AND FILTER is a range of dispensers particularly suited for all applications in which a filtration is required. The stations integrate PIUSI CLEAR or WATER CAPTOR FILTERS and are available with mechanical meter K33 or electronic meter K24/K600 B/3. They come with integrated check valve and 4-meter delivery hose.

ST PANTHER 56, K33, A60 E WATER CAPTOR

ST PANTHER 56, K33, A60 E CLEAR CAPTOR

ST PANTHER 56, K33, A60 AND WATER CAPTOR

ST PANTHER 56, K33, A60 AND CLEAR CAPTOR

BIO diesel VERSION AVAILABLE

ST PANTHER 72 BIO, K33 BIO, A70 BIO AND FILTER BIODIESEL

PERFORMANCE

UP TO 90 L/MIN — FLOW RATE	AC CONTINUOUS DUTY — POWER
± 1% — ACCURACY	UP TO 6MT LENGTH — DELIVERY HOSE

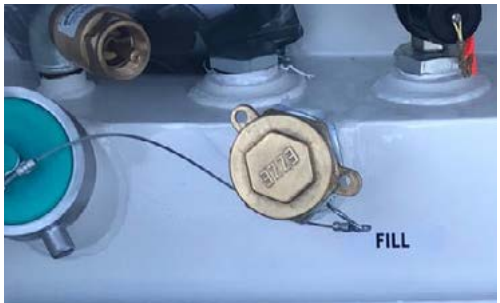

PACKAGING

CODE	WEIGHT		PACKAGING		
	KG	LBS	MM	INCH	PCS/BOX
F00386F0A	25	55	580X380X320	22,8X15X12,6	1
F00265F0A	26	57	580X380X320	22,8X15X12,6	1
F00395F0A	32	71	545X435X340	21,5X17,1X13,4	1
F00386F60	22	48	380X380X480	15X15X18,9	1
F00386R70	22	48	380X380X480	15X15X18,9	1
F00265F40	26	57	580X380X320	22,8X15X12,6	1
F00265S80	26	57	580X380X320	22,8X15X12,6	1
F00395F60	32	71	545X435X340	21,5X17,1X13,4	1
F00265S20	18	40	480X370X260	18,9X14,6X10,2	1
F00265R70	18	40	480X370X260	18,9X14,6X10,2	1
F00395B00	29	63	560X450X370	22X17X14,5	1
F00265B00	21	46	580X400X340	22,8X15,7X13,3	1

ANY BIODIESEL | AIR | ANTIFREEZE | AdBlue® | BIODIESEL | DIESEL | FOOD | GASOLINE | GREASE | KEROSENE | OIL | WATER | WINDSCREEN

AVAILABLE WITH DIFFERENT PUMPS AND METERS

AC PUMP - PANTHER 56/72

AC PUMP - E120

AUTOMATIC NOZZLE

MECHANICAL METER - K33

ELECTRONIC METER - K24

K600 B/3

IN THE BOX

- ST WITH METER AND FILTER
- METER
- FILTER
- DELIVERY HOSE
- NOZZLE
- NOZZLE HOLDER
- INSTRUCTION MANUAL

DETAILS

WATER CAPTOR FILTER

MAN. / AUTOM. NOZZLE

K24 / K600 B/3 METER

K33 METER

DIMENSIONS

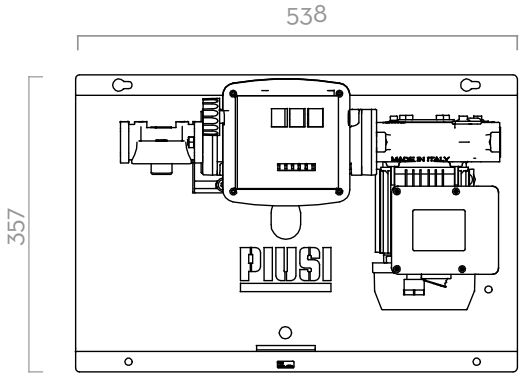

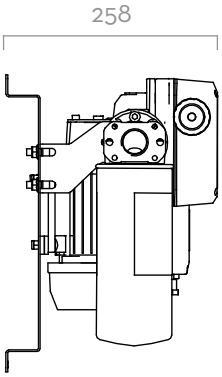

Dimensions expressed in millimeters

COMPONENTS

- PUMPS:
  - PANTHER AC — PAG. 100
  - E80/E120 — PAG. 104
- NOZZLE:
  - AUTOMATIC NOZZLE — PAG. 160
- METER:
  - K33 — PAG. 148
  - K24 — PAG. 134
  - K600 B/3 — PAG. 138
- FILTER
  - WATER CAPTOR — PAG. 172

TECHNICAL DATA

CODE	DESCRIPTION	FLUIDS TYPE	FLOW RATE		VOLTAGE			METER	NOZZLE	FILTER		DELIVERY HOSE		SUCTION HOSE	INLET
			L/MIN	GPM	AC V./HZ DC VOLT	POWER. WATT	AMP. MAX.	TYPE	TYPE	H2O FILTER	BIO-DIE-SEL	LENGHT	Ø	LENGHT	BSP
F00386F0A	ST PANTHER 56 FILTER + A60	D	52	14	230/50	350	3	K33	A60	YES	NO	6M	3/4"	4M	1"
F00265F0A	ST PANTHER 72 FILTER + A60	D	70	18	230/50	500	4,2	K33	A60	YES	NO	6M	3/4"	4M	1"
F00395F0A	ST E120 FILTER + A120	D	85	22	230/50	1150	5,7	K33	A120	YES	NO	6M	1"	4M	1"
F00386F60	ST PANTHER 56 FILTER + A60	D	52	14	230/50	350	3	K33	A60	YES	NO	6M	3/4"	-	-
F00386R70	ST PANTHER 56 + CLEAR CAPTOR + A60	D	52	14	230/50	350	3	K33	A60	YES	NO	6M	3/4"	-	-
F00265F40	ST PANTHER 72 FILTER + A60	D	70	18	230/50	500	4,2	K33	A60	YES	NO	6M	3/4"	-	-
F00265S80	ST PANTHER 72 K600 B/F/6T/PA60	D	70	18	230/50	500	4,2	K600 B/3	A60	YES	NO	6M	1"	-	-
F00395F60	ST E 120 FILTER + A120	D	85	22	230/50	1150	5,7	K33	A120	YES	NO	6M	1"	-	-
F00265S20	ST PANTHER 72 FILTER + K24 METER	D	70	18	230/50	500	4,2	K24	A80	YES	NO	6M	3/4"	-	-
F00265R70	ST PANTHER 72 + CLEAR CAPTOR + A80	D	70	18	230/50	500	4,2	K24	A80	YES	NO	6M	1"	-	-
F00395B00	ST E120 K150/F/6MT/PA120 B100	BIO D	85	22	230/50	1150	5,7	K150 BIO	A120 BIO	NO	YES	6M	1"	-	-
F00265B00	ST PANTHER 72 K33/F/6MT/PA70 B100	BIO D	70	18	230/50	500	4,2	K33 BIO	A70 BIO	NO	YES	6M	3,4"	-	-

ST WITH METER AND FILTER

ST BOX

FEATURES

- STURDY STRUCTURE
- LOCKABLE AND SAFE
- READY TO USE
- FILTRATION GUARANTEED
- NOZZLE CONTACT (PRO VERSION ONLY)

The PIUSI ST BOX is a diesel refueling station complete with pump, flow meter and filter, with lockable metal protection box. The unit is complete with antistatic hose for diesel fuel and automatic dispensing nozzle. The PRO version features the electronic access control box ACCESS 85.

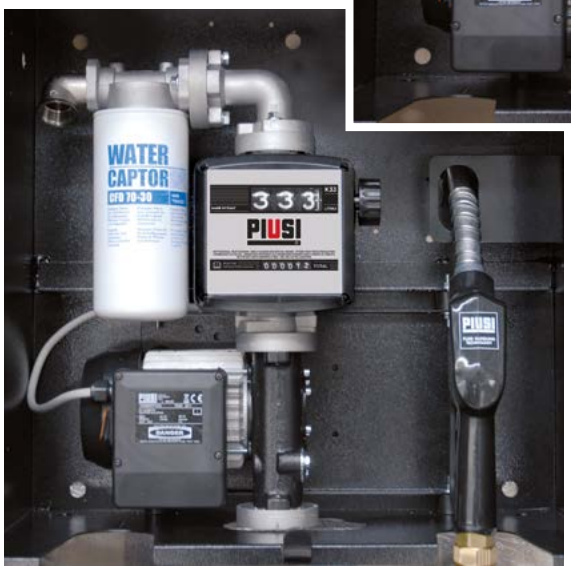

PERFORMANCE

UP TO 90 L/MIN	FLOW RATE
AC CONTINUOUS DUTY	POWER
± 1%	ACCURACY

PACKAGING

CODE	WEIGHT		PACKAGING		
	KG	LBS	MM	INCH	PCS/BOX
WITHOUT ACCESS 85					
00036700B	-	-	-	-	-
00036900B	-	-	-	-	-
F00365020	-	-	-	-	-
F00365060	-	-	-	-	-
F00365050	36	72	575X320X607	22,6X12,6X23,9	1
F00365P0A	40	88	575X320X607	22,6X12,6X23,9	1
F00399000A	50	110	590X340X720	23,2X13,4X28,3	1
WITH ACCESS 85					
F00365010	40	88	575X320X607	22,6X12,6X23,9	1

CHART

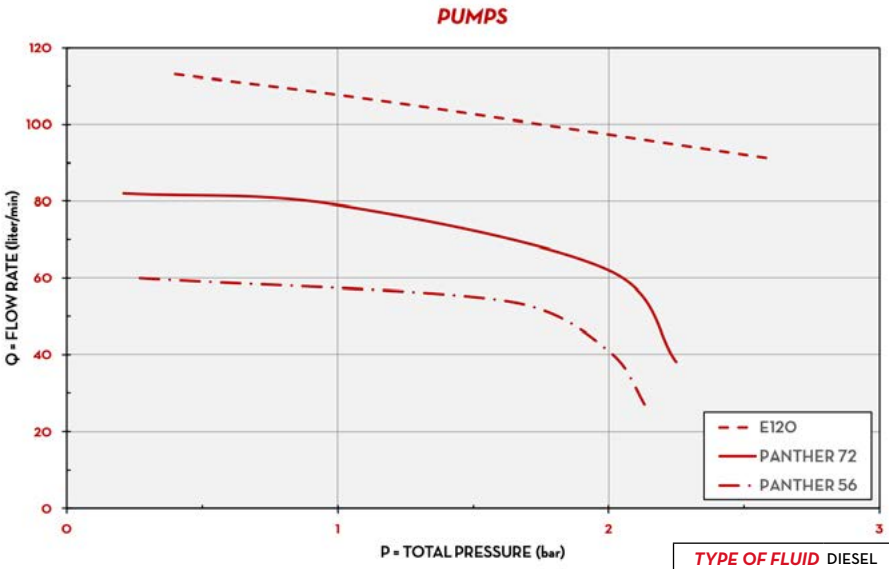

TYPE OF FLUID	DIESEL
TEMPERATURE	20°C

IN THE BOX

- ST BOX UNIT
- METER
- FILTER
- DELIVERY HOSE
- NOZZLE
- INSTRUCTION MANUAL

DETAILS

K33 MECH. METER

WATER CAPTOR FILTER

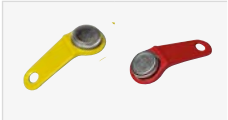
DRIVER&MANAGER KEY

ACCESS 85

DIMENSIONS

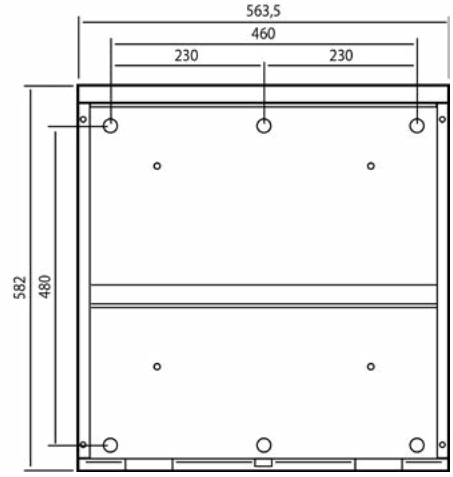

Dimensions expressed in millimeters

COMPONENTS

- PUMPS:
  - PANTHER AC — PAG. 100
  - E80/E120 — PAG. 104
  - BIPUMP — PAG. 118
- NOZZLE:
  - AUTOMATIC NOZZLE — PAG. 160
- METER:
  - K33 — PAG. 148
  - K24 — PAG. 134
- FILTER
  - WATER CAPTOR — PAG. 172
- ACCESS CONTROL
  - ACCESS85 — PAG. 196

TECHNICAL DATA

CODE	DESCRIPTION	FLUIDS TYPE	FLOW RATE		VOLTAGE			PUMP	METER	NOZZLE	FILTER	HOSE		INLET
			L/MIN	GPM	AC V./HZ DC VOLT	POWER WATT	AMP. MAX.	TYPE	TYPE	TYPE	H2O FILTER	LENGTH	Ø	BSP
WITHOUT ACCESS 85														
00036700B	ST BOX E80/M K33 A80	D	80	21	230/50	500	3,5	E80	K33	A80	NO	4M	1"	1"
00036900B	ST BOX E120/M K33 A120	D	90	22	230/50	750	5,7	E120	K33	A120	NO	4M	1"	1"
F00365020	ST BOX PANTHER 56 BASIC	D	56	15	230/50	350	3	PANTH. 56	K33	A60	YES	6M	1"	1"
F00365060	ST BOX PANTHER 72 BASIC	D	70	19	230/50	500	4,2	PANTH. 72	K33	A80	YES	6M	1"	1"
F00365050	ST BOX E 120 BASIC	D	90	22	230/50	750	5,7	E 120	K33	A120	YES	8M	1"	1"
F00365P0A	ST BOX P56/M K33 A60	D	56	15	230/50	350	3	PANTH. 56	K33	A60	NO	4M	3/4"	1"
F0039900A	ST BOX BIPUMP 12V K33 A120	D	80	21	12	530	44	BIPUMP	K33	A80	NO	4M	1"	1"
WITH ACCESS 85														
F00365010	ST BOX PANTHER 72 PRO	D	70	19	230/50	500	4,2	PANTH. 72	K33	A60	YES	8M	1"	1"

PRO VERSION ONLY

ST 200 AC

FEATURES

- *STURDY METALLIC FRAME*
- *READY TO USE*
- *EASY TO MOVE*
- *HEAVY DUTY*

The PIUSI ST 200 AC is a dispenser that allows high flow refueling thanks to the two integrated E120 self-priming rotary electric vane pumps. Fitted with by-pass valve and elevated reliability seal, the dispenser works even at low working temperatures and in every condition on worksites. The oval gear mechanical flow meter guarantees great precision (available on request). It is also available with wheels and handle (on request) for easier handling.

PERFORMANCE

UP TO 200 L/MIN	AC CONTINUOUS DUTY
FLOW RATE	POWER

ST 200 AC

HANDY KIT: VERSION WITH WHEELS AND HANDLE

PACKAGING

CODE	WEIGHT		PACKAGING		
	KG	LBS	MM	INCH	PCS/BOX
F00315000	46	101	587X395X420	23,1X15,6X16,5	1
F16860000	-	-	-	-	-

CHART

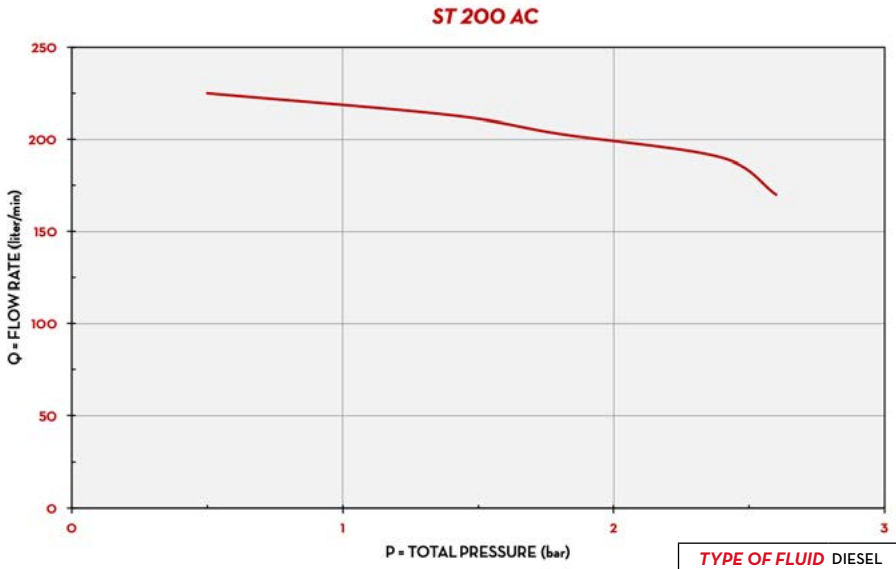

TYPE OF FLUID	DIESEL
TEMPERATURE	13°C

IN THE BOX

- ST 200 AC UNIT
- INSTRUCTION MANUAL

DETAILS

ON/OFF SWITCH

DIMENSIONS

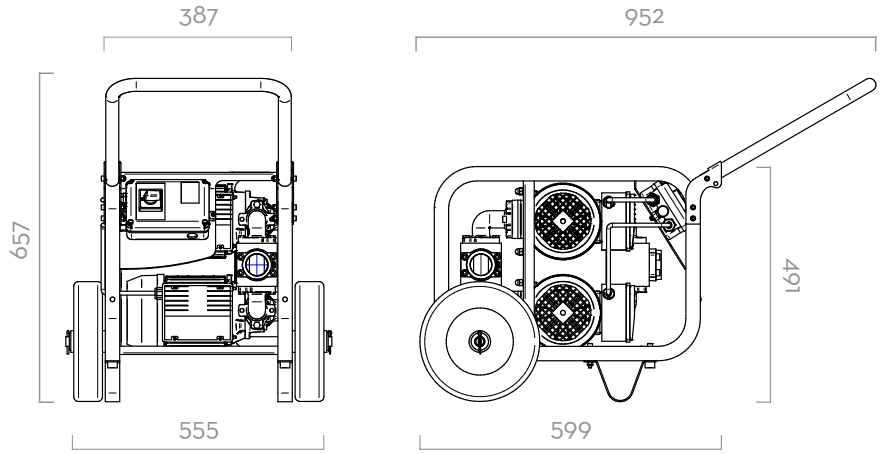

Dimensions expressed in millimeters

MATERIALS

- BODY: CAST IRON
- ROTOR: SINTERED STEEL
- VANES: ACETAL RESIN
- SEAL: VITON
- SHAFT: STEEL

TECHNICAL DATA

CODE	DESCRIPTION	FLUIDS TYPE	FLOW RATE		VOLTAGE			PUMP		MAX PRESSURE	OUTLET
			L/MIN	GPM	AC V./HZ DC VOLT	POWER WATT	AMP. MAX.	TYPE	N°	BAR	BSP
F00315000	ST 200 BASIC	D	200	52,7	230/50	2050	10	E 120	2	2,5	1" 1/2
F16860000	HANDY KIT (HANDLE + WHEELS)	D	-	-	-	-	-	-	-	-	-

ST200 AC

ST 200 DC

FEATURES

- STURDY STRUCTURE
- COMPACT DESIGN
- READY TO USE
- HIGH RELIABILITY
- HEAVY DUTY

PIUSI ST 200 DC is a 24V portable dispensing unit for high flow applications. The low weight of the unit makes it easy to handle and suitable for operating on worksites in every condition; both on tanks or for mobile applications. Thanks to the mechanical meter K700, this sturdy dispenser guarantees the maximum precision (on request).

PERFORMANCE

UP TO 185 L/MIN FLOW RATE	24V VOLTAGE POWER
20 MIN (40MIN OFF) DUTY CICLE	

ST 200 DC

PACKAGING

CODE	WEIGHT		PACKAGING		
	KG	LBS	MM	INCH	PCS/BOX
F00318000	18	40	480X370X265	18,9X14,6X10,4	1

CHART

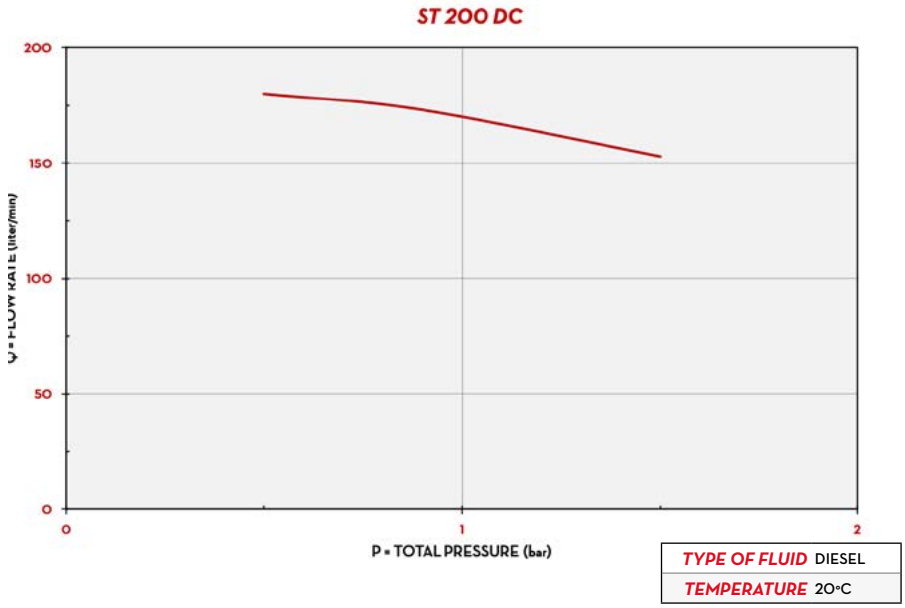

TYPE OF FLUID	DIESEL
TEMPERATURE	20°C

IN THE BOX

- ST 200 DC UNIT
- ELECTRIC CABLE WITH CLAMPS
- INSTRUCTION MANUAL

DETAILS

ON/OFF SWITCH

ELECTRIC CABLE WITH CLAMPS

DIMENSIONS

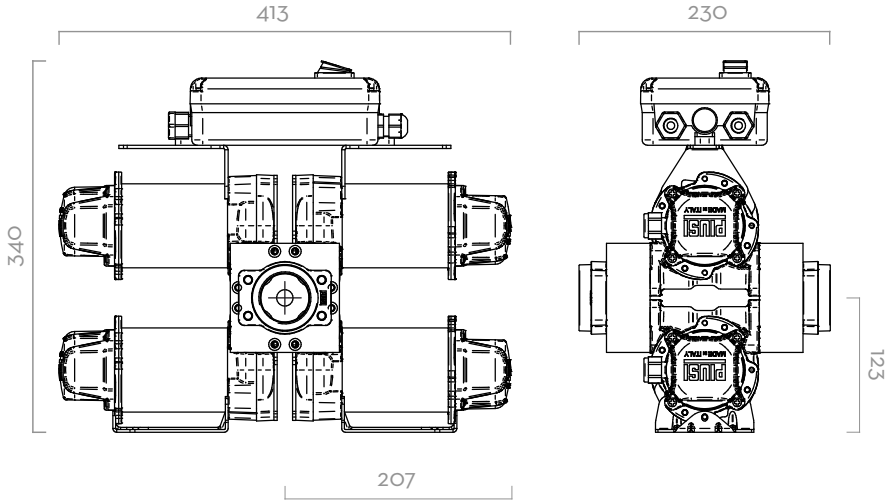

Dimensions expressed in millimeters

MATERIALS

- BODY: CAST IRON
- ROTOR: SINTERED STEEL
- VANES: ACETAL RESIN
- SEAL: NBR
- SHAFT: STEEL

TECHNICAL DATA

CODE	DESCRIPTION	FLUIDS TYPE	FLOW RATE		VOLTAGE			DUTY CICLE	PUMP		MAX PRESSURE	OUTLET
			L/MIN	GPM	AC V./HZ DC VOLT	POWER WATT	AMP. MAX.	MINUTES	TYPE	N°	BAR	BSP
F00318000	ST 200 DC 24 V	D	185	42-48	24	1200	50	30	BYPASS 3000	4	2	1" 1/2

ST200 DC

KITS ACCESSORIES

ATEX

EX50 DRUM	CODICE	DESCRIZIONE
	F1815600B	(EX) ADAPTER FOR CONDUIT EX50
	F1862600A	(EX)CABLE+CABLEGLAND ECEX EX50 12V
	F1862400C	(EX) CABLE GLAND EXD-NPT IECEX
	F1815600B	(EX) ADATTATORE PER CONDUIT EX50

F1862400C F1815600B F1862600A

EX100 DRUM	CODICE	DESCRIZIONE
	F21770000	BUNG ADAPTER 2" BSP COMPLETE
	F22436010	ANTISIPHONE KIT FOR EX100/EX140/E140 BSP
	F22053000	MOTOR SUPPORT FEET EX80/100/140

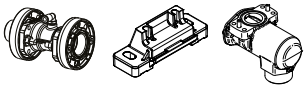

F22436010 F22053000 F21770000

EX140 DRUM	CODICE	DESCRIZIONE
	F21770000	BUNG ADAPTER 2" BSP COMPLETE
	F22436010	ANTISIPHONE KIT FOR EX100/EX140/E140 BSP
	F22053000	MOTOR SUPPORT FEET EX80/100/140

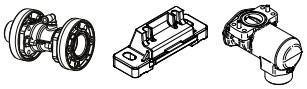

F22436010 F22053000 F21770000

EX50 ST	CODICE	DESCRIZIONE
	F1815600B	(EX) ADAPTER FOR CONDUIT EX50
	F1862600A	(EX)CABLE+CABLEGLAND ECEX EX50 12V
	F1862400C	(EX) CABLE GLAND EXD-NPT IECEX
	F1815600B	(EX) ADATTATORE PER CONDUIT EX50

F1862400C F1815600B F1862600A

MOBILE

BATTERIA KIT	CODICE	DESCRIZIONE
	F16586000	DRUM 3000 KIT
	F16631000	KIT DRUM 3000 K33 / FILTER / ADAPTER

F16586000 F16631000

PIUSIBOX	CODICE	DESCRIZIONE
	F16483010	CARTUCCIA 10 MICRON 3/4IN PIUSI BOX 15PC
	R20764000	K24 ASSEMBLY KIT FOR PIUSIBOX N.

R20764000 F16483010

ST

ST BOX	CODE	DESCRIPTION
	F1249600A	MANAGER KEY 2018
	F1590400A	KIT DRIVER KEY YELLOW (10PCS)
	F17121000	LEVEL PROBE FOR ACCESS 85
	F1721800A	ST BOX NEW

F17121000

F1249600A

F1590400A

ST 200 AC	CODE	DESCRIPTION
	F16860000	KIT WHEELS \ HANDLE ST200
	F18798000	KIT HOSE 1 1/2" 10 MT+CAMLOCK+HOSETAIL
	F18799000	KIT HOSE 1 1/2" 20 MT+CAMLOCK+HOSETAIL

F18798000

F18799000

F16860000

ST 200 DC	CODE	DESCRIPTION
	F18798000	KIT HOSE 1 1/2" 10 MT+CAMLOCK+HOSETAIL
	F18799000	KIT HOSE 1 1/2" 20 MT+CAMLOCK+HOSETAIL

F18798000

F18799000

PUMPS

EX50 AC

FEATURES

- COMPACT AND STURDY DESIGN
- FLANGED COMPONENTS
- ANTI-NOISE FILTER
- THERMAL PROTECTION
- SUCTION UNIT WITH INTEGRATED FILTER (DRUM VERSION)
- UL VERSION AVAILABLE

The PIUSI EX50 AC is a compact and sturdy pump that satisfies the strictest ATEX/IECEx requirements concerning the usage of this equipment in potentially explo-sive atmospheres. It is equipped with built-in bypass valve, non-return valve and anti-noise filter.

PERFORMANCE

UP TO 50 L/MIN FLOW RATE	AC VOLTAGE POWER
30 MIN (30MIN OFF) DUTY CICLE	

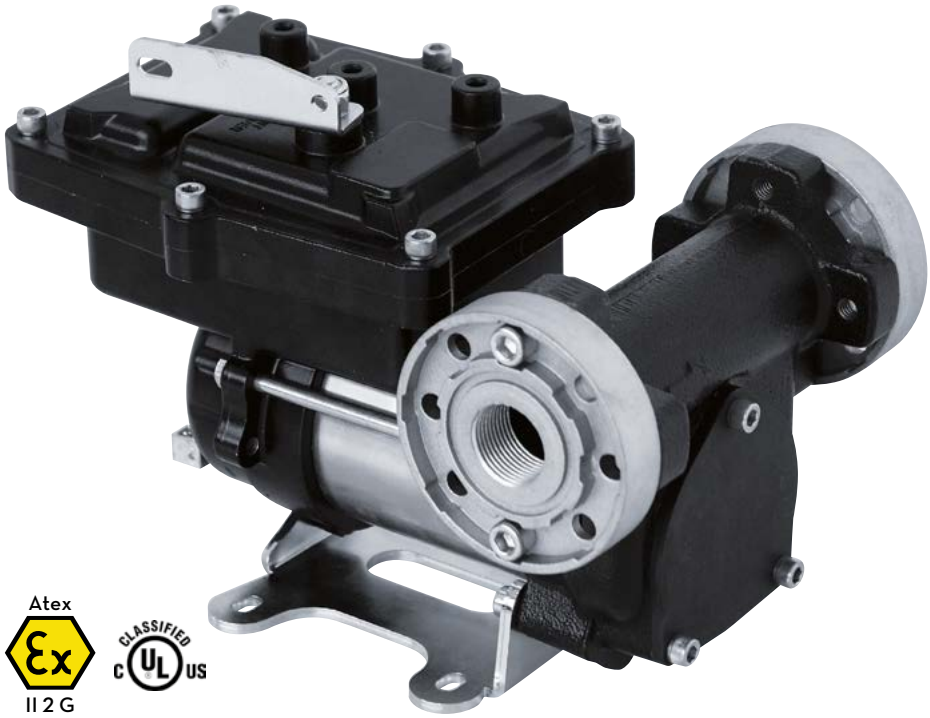

EX50 PUMP

Atex II 2 G

OUR PUMPS COMPLIES WITH THE FOLLOWING MARKING ATEX/IECEX

II	2	G	Ex	d (EX50) / db (EX75)	IIA (EX50) / IIB (EX75)	T4	Gb
GROUP	CATEGORY	TYPE OF EXPLOSIVE ATMOSPHERE	PERMANENT PREFIX	PROTECTION METHOD	GAS GLASS	TEMPERATURE CLASS	EQUIPMENT PROTECTION LEVEL

PACKAGING

CODE	WEIGHT		PACKAGING			N. BOXES / EUROPALLET	
	KG	LBS	MM	INCH	PCS/BOX	✈	🚢
F0037300A	6,9	15,2	345X175X225	-	1	60	84

ANY BIODIESEL · AIR · ANTIFREEZE · AdBlue® · BIODIESEL · DIESEL · FOOD · GASOLINE · GREASE · KEROSENE · OIL · WATER · WINDSCREEN

CHART

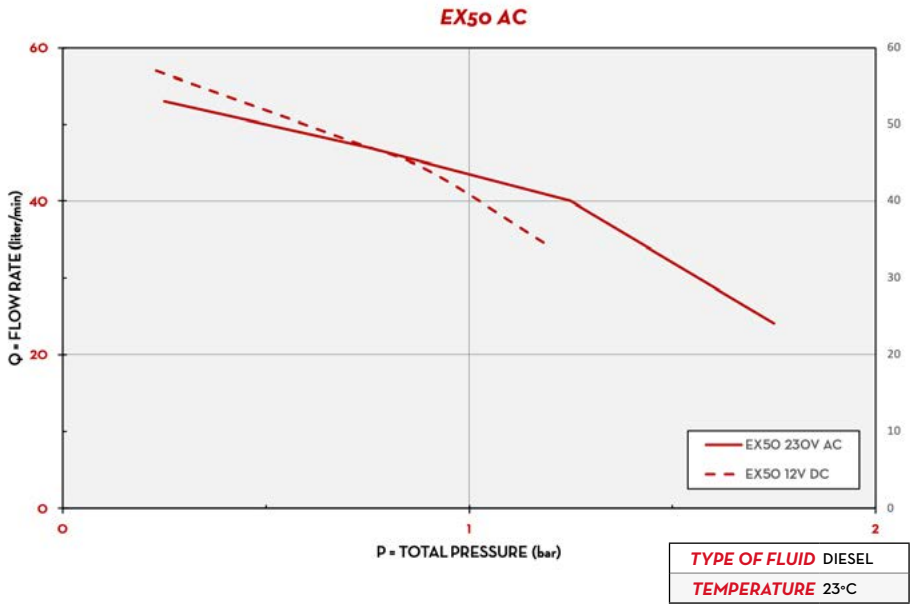

TYPE OF FLUID	DIESEL
TEMPERATURE	23°C

IN THE BOX

- EX50 AC PUMP
- FLANGED CONNECTIONS
- INSTRUCTION MANUAL

DETAILS

ON/OFF SWITCH

FLANGED CONNECTIONS

DIMENSIONS

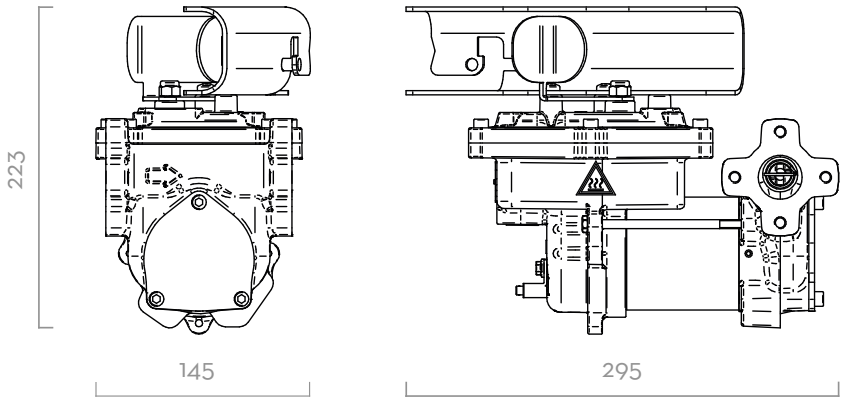

Dimensions expressed in millimeters

MATERIALS

- BODY: CAST IRON
- ROTOR: SINTERED STEEL
- VANES: PPS
- SEAL: VITON
- SHAFT: STEEL

PUMP ← TANK

- MAX 6M (20FT),
- SUCTION HOSE Ø 1" MIN,
- MAX SUCTION HEIGHT:
  - 2M (7FT) W/O NON RETURN VALVE
  - 4M (14FT) W NON RETURN VALVE

TECHNICAL DATA

CODE	DESCRIPTION	FLUIDS TYPE	FLOW RATE		VOLTAGE			DUTY CICLE	RPM	OUTLET
			L/MIN	GPM	AC VOLT/HZ	POWER WATT	AMP. MAX.	MINUTES		BSP
F0037300A	EX50 230V AC ATEX	D G K	50	13	230/50-60	250	1,2	30	2700	1"

( ) UPON REQUEST IT IS AVAILABLE WITH DIFFERENT VOLTAGES AND 60 HZ FREQUENCY. THE PUMP CAN BE USED ONLY WITH THE FOLLOWING FLUIDS: DIESEL, KEROSENE, PETROL, PETROL ALCOHOL MIXED MAX 15% , AVGAS 100/100LL, JET A/A1 - ASPEN 2/4

EX50 AC

EX100

FEATURES

- HIGH FLOW RATE
- HEAVY DUTY
- CONTINUOUS DUTY
- THERMAL PROTECTION
- UL VERSION AVAILABLE
- REMOVABLE PUMP FEET

PIUSI EX100 is the new pump of the EX line, suitable for the transfer of gasoline and diesel with high performance and continuous duty. The directive on the use of materials in potentially explosive atmospheres is very precise, as confirmed by the ATEX certification. Simple to use, compact, versatile, it performs high flow rate and continuous duty cycle.

PERFORMANCE

UP TO 100 L/MIN	AC VOLTAGE
FLOW RATE	POWER

Atex II 2 G

EX100

OUR PUMPS COMPLIES WITH THE FOLLOWING MARKING ATEX/IECEx

II	2	G	Ex	d	IIA	T4	Gb
GROUP	CATEGORY	TYPE OF EXPLOSIVE ATMOSPHERE	PERMANENT PREFIX	PROTECTION METHOD	GAS GLASS	TEMPERATURE CLASS	EQUIPMENT PROTECTION LEVEL

PACKAGING

CODE	WEIGHT		PACKAGING		
	KG	LBS	MM	INCH	PCS/BOX
F00390010	25	55	240X400X350	9,4X15,7X13,8	1
F00390020	25	55	240X400X350	9,4X15,7X13,8	1

ANY BIODIESEL · AIR · ANTIFREEZE · AdBlue® · BIODIESEL · DIESEL · FOOD · GASOLINE · GREASE · KEROSENE · OIL · WATER · WINDSCREEN

CHART

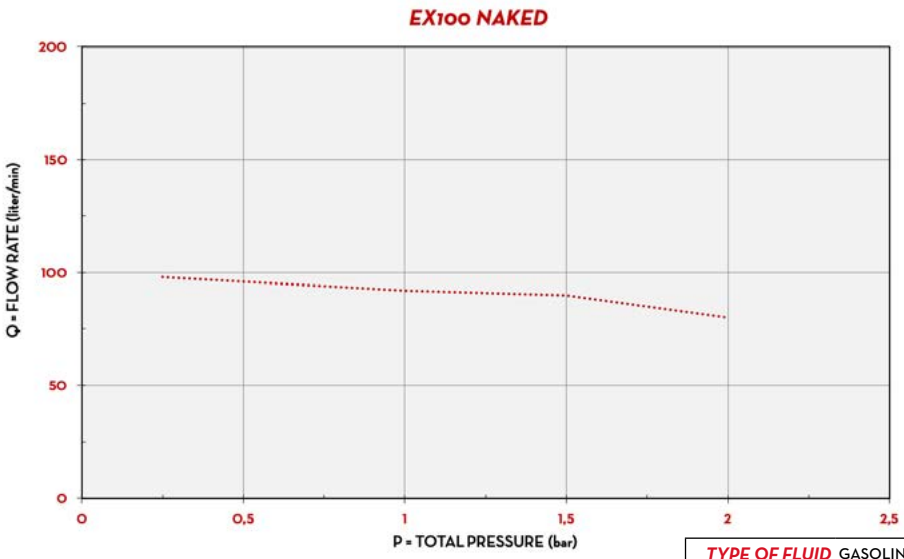

TYPE OF FLUID	GASOLINE
TEMPERATURE	20°C

IN THE BOX

- EX100 PUMP
- PUMP FEET
- INSTRUCTION MANUAL

DETAILS

ON/OFF SWITCH

VANE ROTOR

BYPASS VALVE

DIMENSIONS

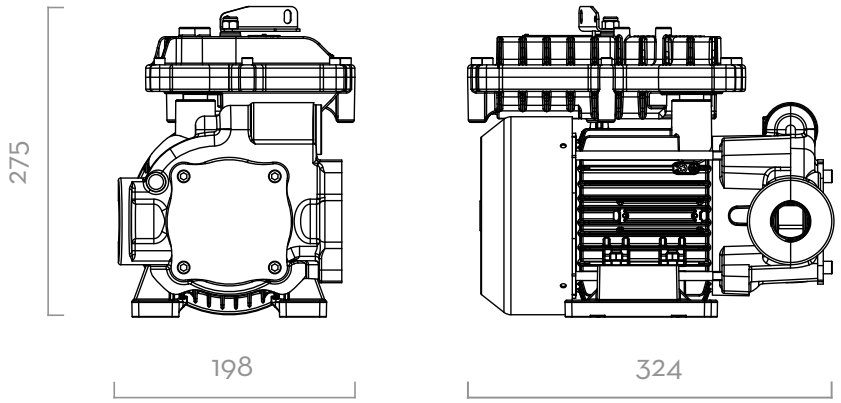

MATERIALS

- BODY: CAST IRON
- ROTOR: SINTERED STEEL
- VANES: TECHNOPOLYMER
- SEAL: VITON
- SHAFT: STEEL

PUMP ← TANK

- MAX 6M (20FT),
- SUCTION HOSE Ø 1" MIN,
- MAX SUCTION HEIGHT:
  - 2M (7FT) W/O NON RETURN VALVE
  - 4M (14FT) W NON RETURN VALVE

Dimensions expressed in millimeters

TECHNICAL DATA

CODE	DESCRIPTION	FLUIDS TYPE	FLOW RATE		VOLTAGE			DUTY CICLE	RPM	INLET	OUTLET
			L/MIN	GPM	AC VOLT/HZ	POWER WATT	AMP. MAX.	CONTINUOUS		BSP	BSP
F00390010	EX 100 230/50	D G K	100	25	230/50	1035	4,5	YES	1450	1" 1/4	1"
F00390020	EX 100 230/60	D G K	100	25	230/60	874	3,8	YES	1750	1" 1/4	1"

( ) UPON REQUEST IT IS AVAILABLE WITH DIFFERENT VOLTAGES AND 60 HZ FREQUENCY. THE PUMP CAN BE USED ONLY WITH THE FOLLOWING FLUIDS: DIESEL, KEROSENE, PETROL, PETROL ALCOHOL MIXED MAX 15% , AVGAS 100/100LL, JET A/A1 - ASPEN 2/4

EX100

EX140

FEATURES

- HIGH FLOW RATE
- HEAVY DUTY
- CONTINUOUS DUTY
- THERMAL PROTECTION
- UL VERSION AVAILABLE
- REMOVABLE PUMP FEET

The entirely new EX line is characterized by a high flow rate that works with a continuous duty cycle, and has been designed to be particularly suitable for Heavy Duty, i.e.for those demanding fleets that need to dispense fuels such as Gasoline, diesel or kerosene quickly.

PERFORMANCE

UP TO 140 L/MIN	AC VOLTAGE
FLOW RATE	POWER

Atex II 2 G

EX140

OUR PUMPS COMPLIES WITH THE FOLLOWING MARKING ATEX/IECEx

II	2	G	Ex	d	IIA	T4	Gb
GROUP	CATEGORY	TYPE OF EXPLOSIVE ATMOSPHERE	PERMANENT PREFIX	PROTECTION METHOD	GAS GLASS	TEMPERATURE CLASS	EQUIPMENT PROTECTION LEVEL

PACKAGING

CODE	WEIGHT		PACKAGING		
	KG	LBS	MM	INCH	PCS/BOX
F00395010	25	55	240X400X350	9,4X15,7X13,8	1
F00395020	25	55	240X400X350	9,4X15,7X13,8	1
F00395030	25	55	240X400X350	9,4X15,7X13,8	1

ANY BIODIESEL · AIR · ANTIFREEZE · AdBlue® · BIODIESEL · DIESEL · FOOD · GASOLINE · GREASE · KEROSENE · OIL · WATER · WINDSCREEN

CHART

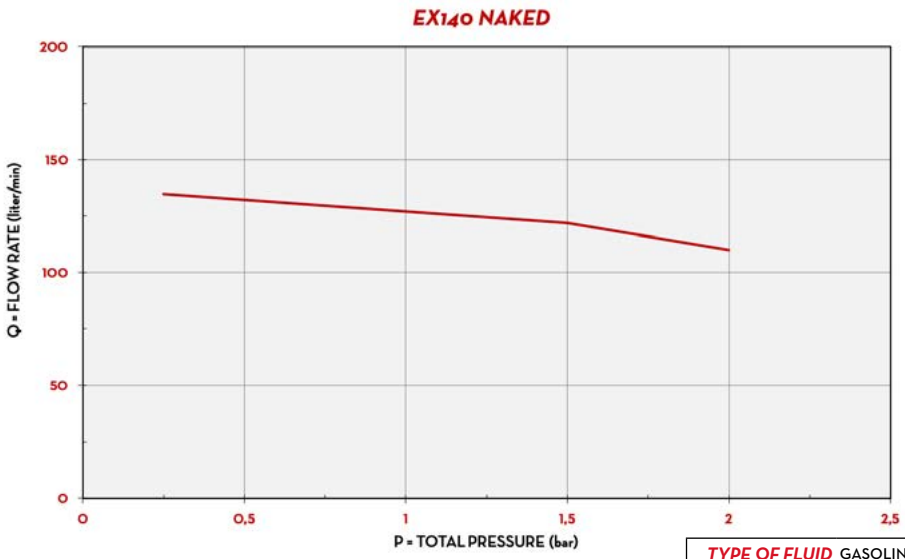

TYPE OF FLUID	GASOLINE
TEMPERATURE	20°C

IN THE BOX

- EX140 PUMP
- PUMP FEET
- INSTRUCTION MANUAL

DETAILS

ON/OFF SWITCH

VANE ROTOR

BYPASS VALVE

DIMENSIONS

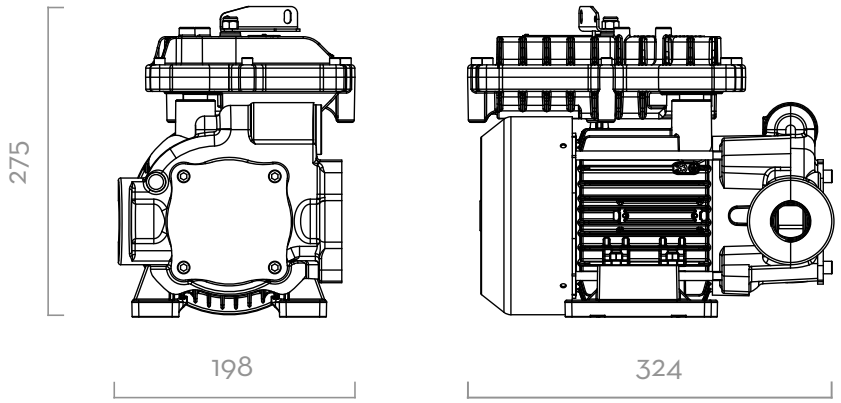

MATERIALS

- BODY: CAST IRON
- ROTOR: SINTERED STEEL
- VANES: TECHNOPOLYMER
- SEAL: VITON
- SHAFT: STEEL

PUMP ← TANK

- MAX 6M (20FT),
- SUCTION HOSE Ø 1" MIN,
- MAX SUCTION HEIGHT:
  - 2M (7FT) W/O NON RETURN VALVE
  - 4M (14FT) W NON RETURN VALVE

Dimensions expressed in millimeters

TECHNICAL DATA

CODE	DESCRIPTION	FLUIDS TYPE	FLOW RATE		VOLTAGE			DUTY CICLE	RPM	INLET	OUTLET
			L/MIN	GPM	AC VOLT/HZ	POWER WATT	AMP. MAX.	CONTINUOUS		BSP	BSP
F00395010	EX 140 230/50	D G K	140	37	230/50	1150	5	YES	1450	1" 1/4	1"
F00395020	EX 140 250/50	D G K	140	37	250/50	1125	4,5	YES	1450	1" 1/4	1"
F00395030	EX 140 230/60	D G K	140	37	230/60	920	4	YES	1750	1" 1/4	1"

( ) UPON REQUEST IT IS AVAILABLE WITH DIFFERENT VOLTAGES AND 60 HZ FREQUENCY. THE PUMP CAN BE USED ONLY WITH THE FOLLOWING FLUIDS: DIESEL, KEROSENE, PETROL, PETROL ALCOHOL MIXED MAX 15% , AVGAS 100/100LL, JET A/A1 - ASPEN 2/4

EX140

EX50 / EX75 DC

FEATURES

- COMPACT AND STURDY DESIGN
- FLANGED COMPONENTS
- ANTI-NOISE FILTER
- THERMAL PROTECTION
- SUCTION UNIT WITH INTEGRATED FILTER (DRUM VERSION)
- UL LISTED MOTOR AVAILABLE

The PIUSI EX50/EX75 DC is a transfer pump suitable for flammable fuels such as petrol, kerosene and diesel. It is fully compliant with ATEX/IECEx requirements for the usage in potentially explosive atmospheres. Designed to transfer flammable fluids from tanks of any type, this pump is available in DC version and is fitted with a bypass valve and can dispense up to 75 l/min, with reduced absorption to ensure a long life to the pump.

PERFORMANCE

UP TO 75 L/MIN	12V VOLTAGE
FLOW RATE	POWER

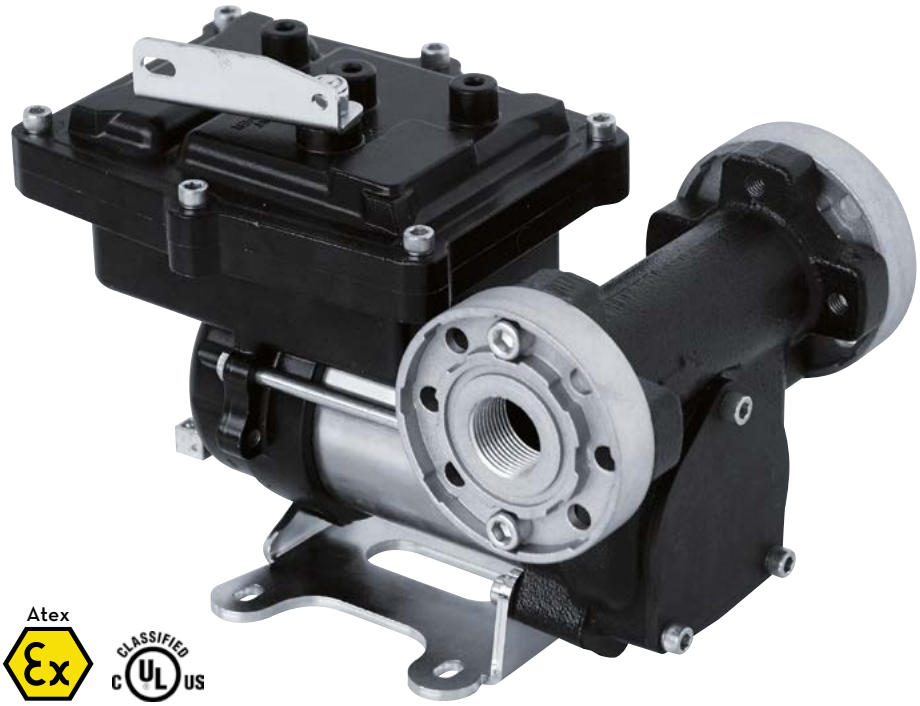

EX75 DC

Atex II 2 G

OUR PUMPS COMPLIES WITH THE FOLLOWING MARKING ATEX/IECEx

II	2	G	Ex	d (EX50) / db (EX75)	IIA (EX50) / IIB (EX75)	T4	Gb
GROUP	CATEGORY	TYPE OF EXPLOSIVE ATMOSPHERE	PERMANENT PREFIX	PROTECTION METHOD	GAS GLASS	TEMPERATURE CLASS	EQUIPMENT PROTECTION LEVEL

PACKAGING

CODE	WEIGHT		PACKAGING			N. BOXES / EUROPALLET	
	KG	LBS	MM	INCH	PCS/BOX	✈	🚢
F00371000	6,9	15,2	345X175X225	-	1	60	84
F00380000	8	17,8	350X185X260	-	1	60	84

ANY BIODIESEL · AIR · ANTIFREEZE · AdBlue® · BIODIESEL · DIESEL · FOOD · GASOLINE · GREASE · KEROSENE · OIL · WATER · WINDSCREEN

CHART

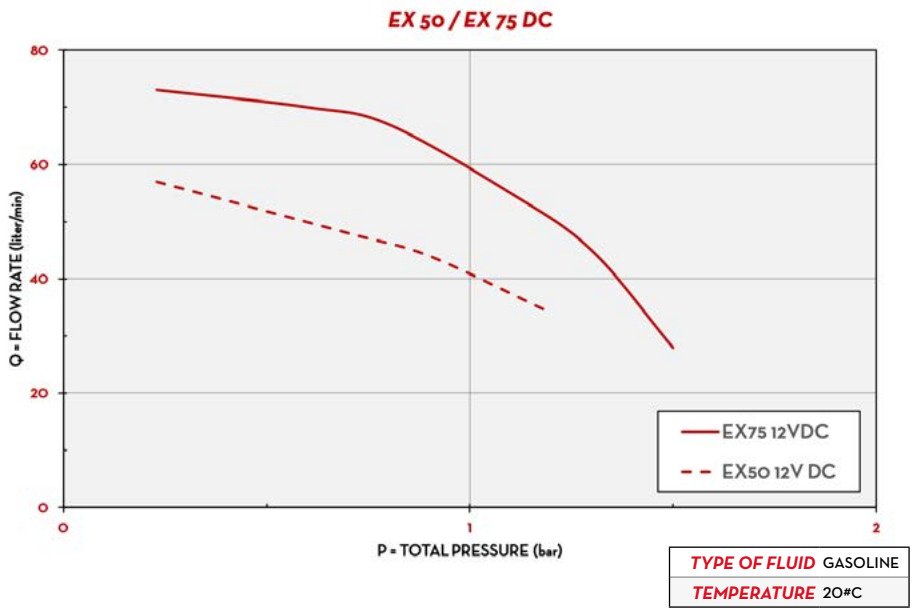

IN THE BOX

- EX50 / EX75 DC PUMP
- FLANGED CONNECTIONS
- INSTRUCTION MANUAL

DETAILS

ON/OFF SWITCH

FLANGED CONNECTIONS

DIMENSIONS

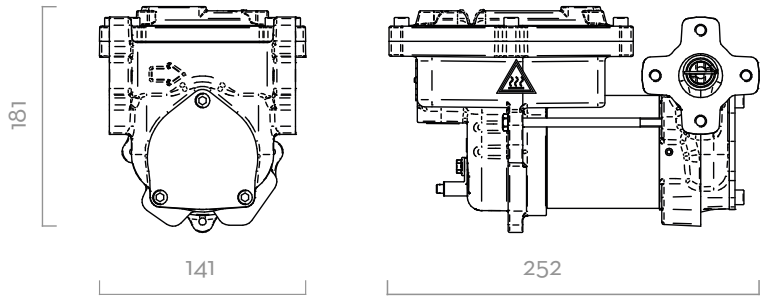

MATERIALS

- BODY: CAST IRON
- ROTOR: SINTERED STEEL
- VANES: PPS
- SEAL: VITON
- SHAFT: STEEL

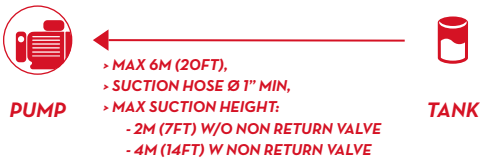

Dimensions expressed in millimeters

TECHNICAL DATA

CODE	DESCRIPTION	FLUIDS TYPE	FLOW RATE		VOLTAGE			DUTY CICLE	RPM	OUTLET
			L/MIN	GPM	AC VOLT/HZ	POWER WATT	AMP. MAX.	MINUTES		BSP
F00371000	EX50 12V DC ATEX	D G K	50	13	12	250	21	30	2700	1"
F00380000	EX75 12V DC ATEX	D G K	75	19,8	12	240	20	30	2700	1"

( ) UPON REQUEST IT IS AVAILABLE WITH DIFFERENT VOLTAGES AND 60 HZ FREQUENCY. THE PUMP CAN BE USED ONLY WITH THE FOLLOWING FLUIDS: DIESEL, KEROSENE, PETROL, PETROL ALCOHOL MIXED MAX 15% , AVGAS 100/100LL, JET A/A1 - ASPEN 2/4

EX50 / EX75 DC

EXGO!

FEATURES

- CONTINUOUS DUTY
- COMPACT AND STURDY DESIGN
- EASY TO INSTALL
- BUILT-IN BYPASS
- THERMAL PROTECTION
- REDUCED NOISE LEVEL
- SELF-PRIMING

The PIUSI EX GO! is a compact and sturdy ATEX vane pump; expressly engineered to work safely in potentially explosives atmosphere. As the name says, this continuous duty DC pump is easy to place thanks to the small sizes and represents the ideal solution for small mobile tanks thanks to the remote control (on/off switch) and long cables (5mt EXGO! Switch - 3mt EXGO! without Switch). It can be used to dispense several fluids: Gasoline and E15, Diesel, Paraffinic Biodiesel.
It is equipped with built-in bypass valve and a thermal protected motor.

PERFORMANCE

UP TO 32 L/MIN FLOW RATE	MAX 1,2 BAR OPERATING PRESSURE
DC 12V VOLTAGE POWER	CONTINUOUS DUTY

EXGO!

EXGO! BATTERY KIT

Atex
II 2 G

OUR PUMPS COMPLIES WITH THE FOLLOWING MARKING ATEX/IECEx

II	2	G	Ex	d (EX50)	db (EX75)	IIA (EX50)	IIB (EX75)	T4	Gb
GROUP	CATEGORY	TYPE OF EXPLOSIVE ATMOSPHERE	PERMANENT PREFIX	PROTECTION METHOD		GAS GLASS		TEMPERATURE CLASS	EQUIPMENT PROTECTION LEVEL

PACKAGING

CODE	WEIGHT		PACKAGING			N. BOX / EUROPALLET	
	KG	LBS	MM	INCH	PCS/BOX	✈	🚢
F00381020	5,43	12	280X160X140	-	1	-	-
F00381500	5,43	12	280X160X140	-	1	-	-
F00225X00	9,8	21,6	350X350X180	-	1	H	

ANY BIODIESEL AIR ANTIFREEZE AdBlue® BIODIESEL DIESEL FOOD GASOLINE GREASE KEROSENE OIL WATER WINDSCREEN

CHART

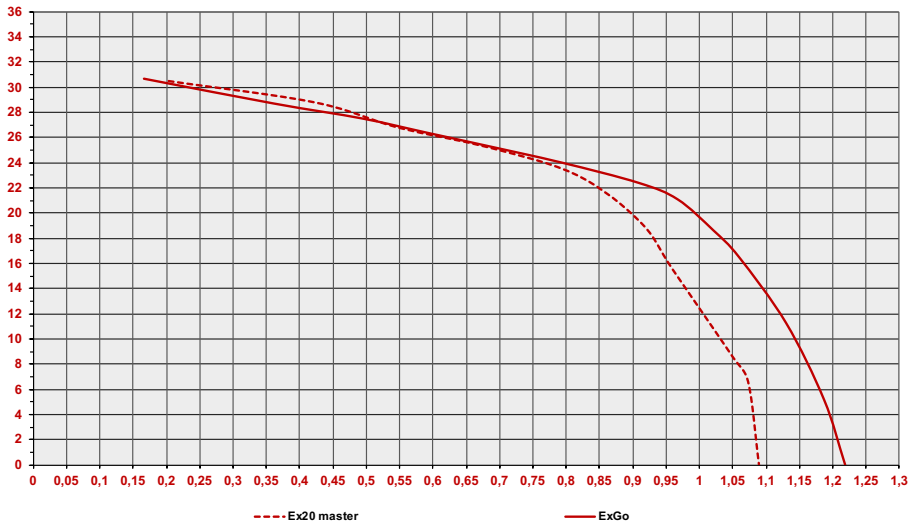

IN THE BOX

- EXGO! PUMP/EXGO BATTERY KIT
- DELIVERY HOSE 2,5 MT (ONLY EXGO BATTERY KIT)
- SELF2000 NOZZLE (ONLY EXGO BATTERY KIT)
- INSTRUCTION MANUAL

DETAILS

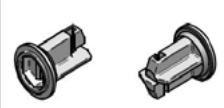
BUILT- IN BY-PASS VALVE

SWITCH ON/OFF

ELECTRIC CABLE WITH CLAMPS

SELF 2000 NOZZLE WITH DELIVERY HOSE 2,5M (ONLY EXGO BATTERY KIT)

DIMENSIONS

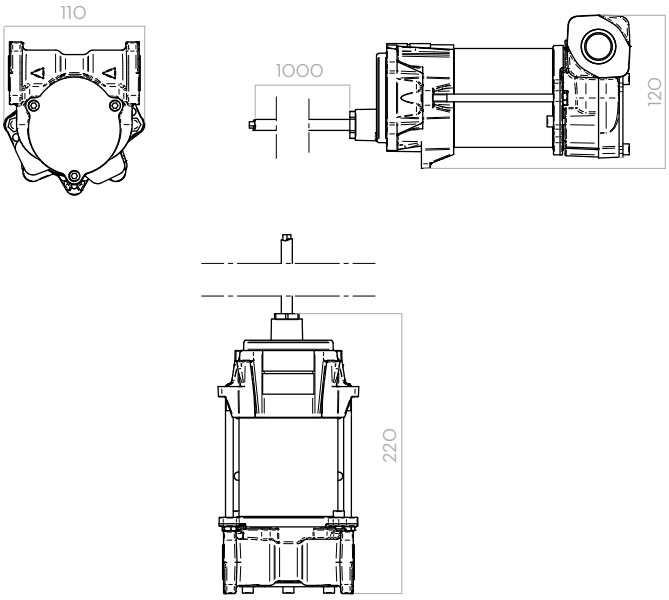

Dimensions expressed in millimeters

MATERIALS

- BODY: CAST IRON
- ROTOR: SINTERED STEEL
- VANES: PPS
- SEAL: FKM
- SHAFT: STEEL

TECHNICAL DATA

CODE	DESCRIPTION	FLUIDS TYPE	FLOWRATE		VOLTAGE			FUSIBLES	DUTY CYCLE	NOZZLE	RPM	HOSE		IN	OUT	CHECK FILTER
			L/MIN	GPM	DC VOLT	POWER WATT	AMP. MAX.	AMPERE	MINUTE			LENGT.	Ø	BSP		
F00381020	EXGO! 12V DC ATEX	B D G K	32	8,5	12	108	9A	25A	CONTINUOUS	-	1400	-	-	3/4"	3/4"	-
F00381500	(EX) EX20 12V DC (W/O SWITCH)	B D G K	32	8,5	12	108	9A	25A	CONTINUOUS	-	1400	-	-	3/4"	3/4"	-
F00225X00	EXGO BATTERY KIT	B D G K	32	8,5	12	108	9A	25A	CONTINUOUS	SELF 2000	1400	2,5M	3/4"	3/4"	3/4"	SI

PANTHER AC

FEATURES

- COMPACT AND STURDY DESIGN
- READY TO USE
- EASY TO INSTALL
- INTEGRATED FILTER

The PIUSI PANTHER AC is a versatile self-priming rotary electric vane transfer pump available in three versions (56 - 72 - 90) particularly suitable for dispensers, fixed fuel transferring system and other industrial applications. It is equipped with a by-pass valve and an incorporated filter to stop impurities.

PANTHER 56 (flanges not included)

PANTHER 72 - PANTHER 90 (flanges included)

PERFORMANCE

UP TO 90 L/MIN	AC CONTINUOUS DUTY *
FLOW RATE	POWER

BIO diesel VERSION AVAILABLE

PANTHER 72 BIO

PACKAGING

CODE	WEIGHT		PACKAGING			N. BOXES / EUROPALLET	
	KG	LBS	MM	INCH	PCS/BOX	✈	🚢
PANTHER 56							
F00730000	7,4	16,3	345X175X255	-	1	60	84
000731000	7,4	16,3	345X175X255	-	1	60	84
000733000	7,4	16,3	345X175X255	-	1	60	84
PANTHER 72							
000732000	7,9	17,4	345X175X255	-	1	60	84
000735000	7,9	17,4	345X175X255	-	1	60	84
F00732B00	7,9	17,4	345X175X255	-	1	60	84
PANTHER 90							
F00733020	9,007	19,9	345X175X255	-	1	60	84

ANY BIODIESEL | AIR | ANTIFREEZE | AdBlue® | BIODIESEL | DIESEL | FOOD | GASOLINE | GREASE | KEROSENE | OIL | WATER | WINDSCREEN

CHART

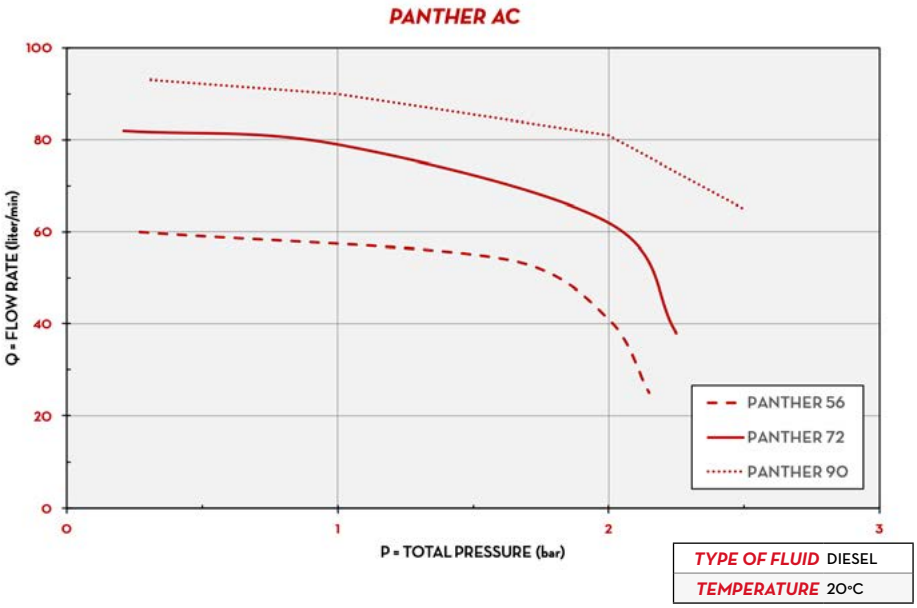

IN THE BOX

- PANTHER AC PUMP
- INSTRUCTION MANUAL

DETAILS

VANE ROTOR

INTEGRATED FILTER

DIMENSIONS

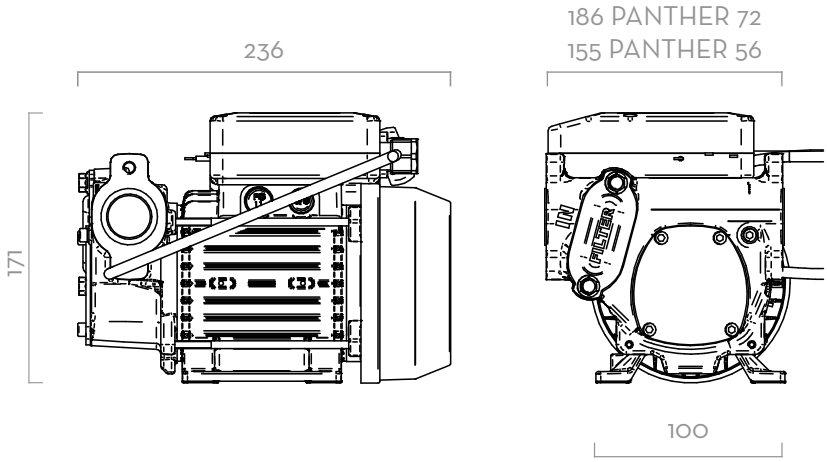

Dimensions expressed in millimeters

MATERIALS

- BODY: CAST IRON
- ROTOR: SINTERED STEEL
- VANES: TECHNOPOLYMER
- SHAFT: STEEL

PUMP ← TANK

- MAX 6M (20FT),
- SUCTION HOSE Ø 1" MIN,
- MAX SUCTION HEIGHT:
  - 2M (7FT) W/O NON RETURN VALVE
  - 4M (14FT) W NON RETURN VALVE

TECHNICAL DATA

CODE	DESCRIPTION	FLUIDS TYPE	FLOW RATE L/MIN	FLOW RATE GPM	VOLTAGE SINGLEPHASE MOTOR V./HZ	VOLTAGE THREEPHASE MOTOR V./HZ	VOLTAGE POWER WATT	VOLTAGE AMP. MAX.	RPM	INLET OUTLET BSP	FLANGE CON-NECTION	BYPASS VALVE	INLET FILTER	DUTY CYCLE MINUTE
PANTHER 56														
F00730000	PANTHER 56 230/50	D	56	15	230/50	-	350	3	2900	1"	-	YES	YES	
000731000	PANTHER 56 230/60	D	70	18	230/60	-	500	3,9	3400	1"	-	YES	YES	
000733000	PANTHER 56 400/50	D	56	15	-	400/50	500	1,3	2900	1"	-	YES	YES	
PANTHER 72														
000732000	PANTHER 72 230/50	D	72	19	230/50	-	500	4,2	2900	1"	YES	YES	YES	
000735000	PANTHER 72 400/50	D	72	19	-	400/50	500	1,6	2900	1"	YES	YES	YES	
F00732B00	PANTHER 72 230V/50HZ B100	B20 D	72	19	230/50	-	500	4,2	2900	1"	YES	YES	YES	
PANTHER 90														
F0073302A	PANTHER 90 230/50	D	90	23,8	230/50	-	700	4,9	2900	1"	YES	YES	YES	30

UPON REQUEST IT IS AVAILABLE WITH DIFFERENT VOLTAGES AND 60 HZ FREQUENCY.
(*) EXCEPT PANTHER 90

PANTHER AC

VISCOMAT VANE

FEATURES

- VERSATILITY
- MOBILE AND READY TO USE
- MULTIPURPOSE PUMP
- ADJUSTABLE BYPASS

The PIUSI VISCOMAT VANE is an electric vane pump suitable for all those applications where it is necessary to apply a transfer system with high suction capacity in order to transfer fluids with low viscosity up to 500 cSt. The pump is fitted with an asynchronous and self-ventilating motor, closed and available in different voltages and frequencies in order to adapt to any working condition.

PERFORMANCE

UP TO 50 L/MIN FLOW RATE	AC CONTINUOUS DUTY POWER
UP TO 500 CST VISCOSITY	

VISCOMAT VANE

PACKAGING

CODE	WEIGHT		PACKAGING			N. BOXES / EUROPALLET	
	KG	LBS	MM	INCH	PCS/BOX	✈	🚢
VISCOMAT 70							
F0033490A	14,1	31,1	355X185X285	-	1	60	72
F0033190A	14,1	31,1	350X200X280	-	1	60	72
VISCOMAT 90							
F00303M00	14,1	31,1	350X200X280	-	1	60	72
000303000	14,1	31,1	350X200X280	-	1	60	72

ANY BIODIESEL · AIR · ANTIFREEZE · AdBlue® · BIODIESEL · DIESEL · FOOD · GASOLINE · GREASE · KEROSENE · OIL · WATER · WINDSCREEN

CHART

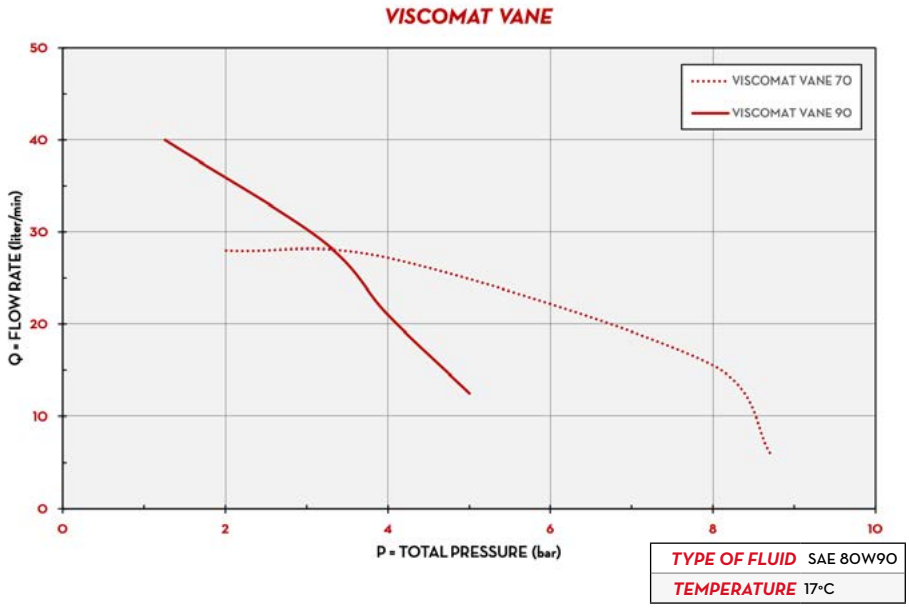

TYPE OF FLUID	SAE 80W90
TEMPERATURE	17°C

IN THE BOX

- VISCOMAT VANE PUMP
- INSTRUCTION MANUAL

DETAILS

ON/OFF SWITCH

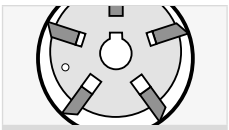
VANE ROTOR

ADJUSTABLE BYPASS VALVE

DIMENSIONS

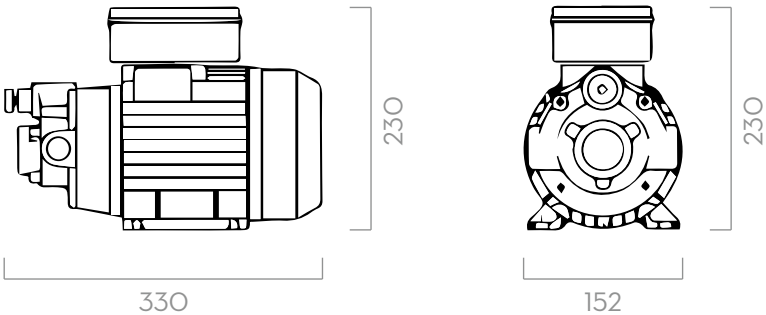

Dimensions expressed in millimeters

MATERIALS

- BODY: CAST IRON
- ROTOR: SINTERED STEEL
- VANES: TECHNOPOLYMER
- SHAFT: STEEL

PUMP ← TANK

- SUCTION HOSE Ø 1" MIN,
- MAX SUCTION HEIGHT:
  - 2M (7FT) W/O NO BACK VALVE
  - 4M (14FT) W NO BACK VALVE

TECHNICAL DATA

CODE	DESCRIPTION	FLUIDS TYPE	FLOW RATE		PRESSURE		VOLTAGE				RPM	INLET OUTLET	ADJUSTABLE BYPASS VALVE
			L/MIN	GPM	BAR	PSI	SINGLEPHASE MOTOR V./HZ	THREEPHASE MOTOR V./HZ	POWER WATT	AMP. MAX.		BSP	
VISCOMAT 70													
F0033490A	VISCOMAT 70 M 230/50-60	D O B	25	7	6	85	230/50-60	-	1200/1100	5,5 - 5,1	1470/1650	1"	YES
F0033190A	VISCOMAT 70 T 400/50-60	D O B	25	7	6	85	-	400/50 - 400/60	650/1000	2,2 - 3,1	1450/1750	1"	YES
VISCOMAT 90													
F00303M00	VISCOMAT 90 M 230/50-60	D O B	50	13	5	71	230/50-60	-	1350/1600	6,2 - 4,9	1400/1600	1"	NO
000303000	VISCOAMT 90 T 400/50	D O B	50	13	5	71	-	400/50	2000	5	1450	1"	YES

UPON REQUEST IT IS AVAILABLE WITH DIFFERENT VOLTAGE AND FREQUENCY

VISCOMAT VANE

E80 / E120

FEATURES

- VERSATILITY
- STURDY STRUCTURE
- LONG LASTING
- REASY TO USE
- THERMAL PROTECTION

The PIUSI E80 and E120 are self-priming rotary electric vane pumps, com-pact and easy to install, suitable to meet all those use requirements needing a high-performance and long lasting product. The sturdy structure along with the thermal protection and the top-quality components allow its use at low working temperatures.

E80/E120

PERFORMANCE

UP TO 100 L/MIN	AC CONTINUOUS DUTY
FLOW RATE	POWER

E120 BIO

VERSION AVAILABLE

PACKAGING

CODE	WEIGHT		PACKAGING			N. BOXES / EUROPALLET	
	KG	LBS	MM	INCH	PCS/BOX	✈	🚢
E80							
000305000	10,26	22,6	355X185X285	-	1	60	72
000307000	10,26	22,6	355X185X285	-	1	60	72
E120							
000326000	13,25	29,2	355X185X285	-	1	60	72
000312000	13,25	29,2	355X185X285	-	1	60	72
F00326B00	13,25	29,2	355X185X285	-	1	60	72

ANY BIODIESEL | AIR | ANTIFREEZE | AdBlue® | BIODIESEL | DIESEL | FOOD | GASOLINE | GREASE | KEROSENE | OIL | WATER | WINDSCREEN

CHART

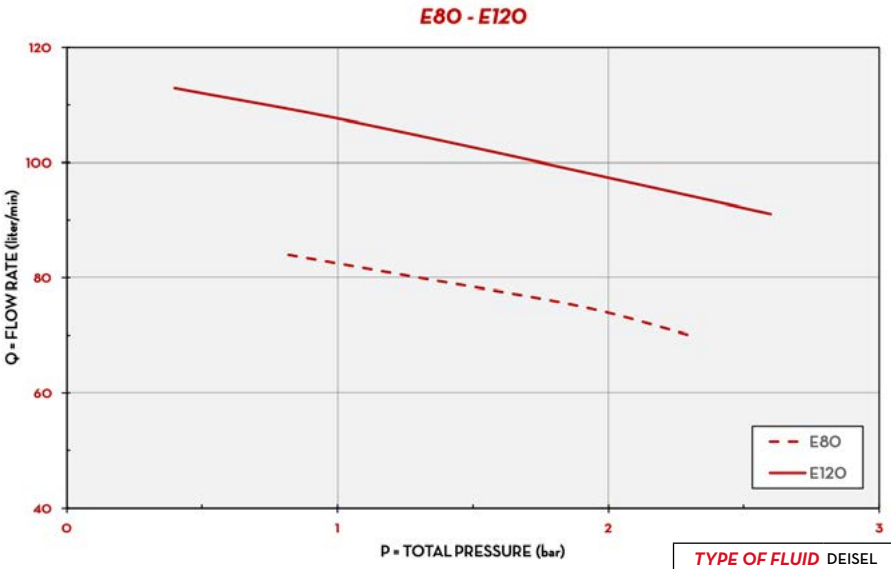

TYPE OF FLUID	DEISEL
TEMPERATURE	15°C

IN THE BOX

- E80/E120 PUMP
- FLANGED CONNECTION
- INSTRUCTION MANUAL

DETAILS

VANE ROTOR

FLANGED CONNECTION

DIMENSIONS

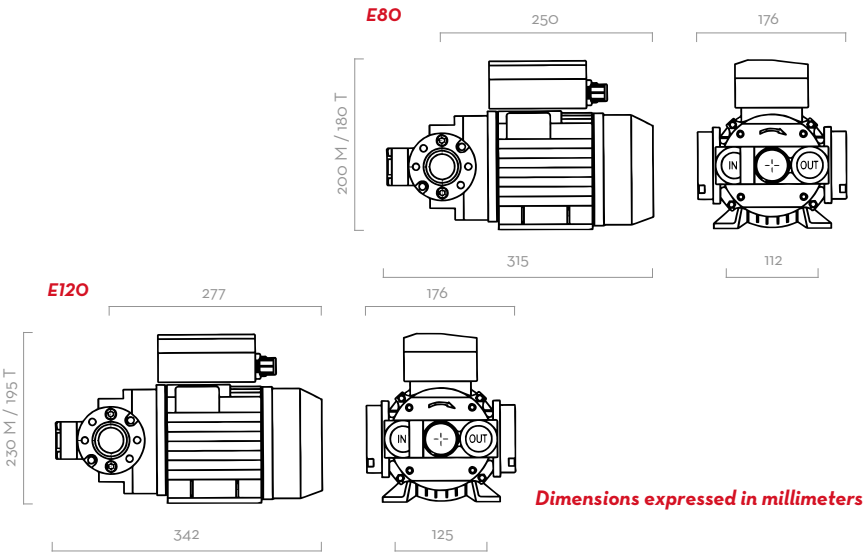

Dimensions expressed in millimeters

MATERIALS

- BODY: CAST IRON
- ROTOR: SINTERED STEEL
- VANES: ACETAL RESIN
- SEAL: VITON
- SHAFT: STEEL

PUMP ← TANK

- MAX 6M (20FT),
- SUCTION HOSE Ø 1" MIN,
- MAX SUCTION HEIGHT:
  - 2M (7FT) W/O NON RETURN VALVE
  - 4M (14FT) W NON RETURN VALVE

TECHNICAL DATA

CODE	DESCRIPTION	FLUIDS TYPE	FLOW RATE L/MIN	FLOW RATE GPM	VOLTAGE SINGLEPHASE MOTOR V./HZ	VOLTAGE THREEPHASE MOTOR V./HZ	VOLTAGE POWER WATT	VOLTAGE AMP. MAX.	RPM	INLET OUTLET BSP	FLANGE CONNECTION	BYPASS VALVE	INLET FILTER
E 80													
000305000	E 80 M	D	70	18	230/50	-	500	3,5	1400	1"	YES	YES	NO
000307000	E 80 T	D	70	18	-	400/50	550	1,6	1450	1"	YES	YES	NO
E 120													
000326000	E 120 M	D	100	26	230/50	-	750	5,7	1450	1"	YES	YES	NO
000312000	E 120 T	D	100	26	-	400/50	750	2,2	1450	1"	YES	YES	NO
F00326B00	E 120/M + INT. FLANGE D.80 B100	BIO D	100	26	230/50	-	750	5,7	1450	1"	YES	YES	NO

E80 / E120

E140

FEATURES

- CONTINUOUS DUTY
- HIGH FLOW RATE
- HEAVY DUTY PUMP
- STURDY DESIGN

The E140 diesel transfer pump is versatile and suitable for different industries including automotive, agriculture, transportation, garages and construction. The E140 volumetric, self-priming vane pump for diesel transfer has a high seal and is reliable in conditions of use at low temperatures. With its solid and resistant body, the E140 is an easy to install diesel transfer pump, suitable for use in diesel dispensers and fixed fuel transfer systems, as well as other industrial applications. The compact cast iron structure makes the E140 electric pump the perfect system for performance and reliability.

PERFORMANCE

UP TO 140 L/MIN	AC VOLTAGE
FLOW RATE	POWER

E140

PACKAGING

CODE	WEIGHT		PACKAGING			N. BOXES / EUROPALLET	
	KG	LBS	MM	INCH	PCS/BOX	✈	🚢
F00395060	18	40	350X250X300	14X10X12	1	60	72
F00395050	18	40	350X250X300	14X10X12	1	60	72

ANY BIODIESEL · AIR · ANTIFREEZE · AdBlue® · BIODIESEL · DIESEL · FOOD · GASOLINE · GREASE · KEROSENE · OIL · WATER · WINDSCREEN

CHART

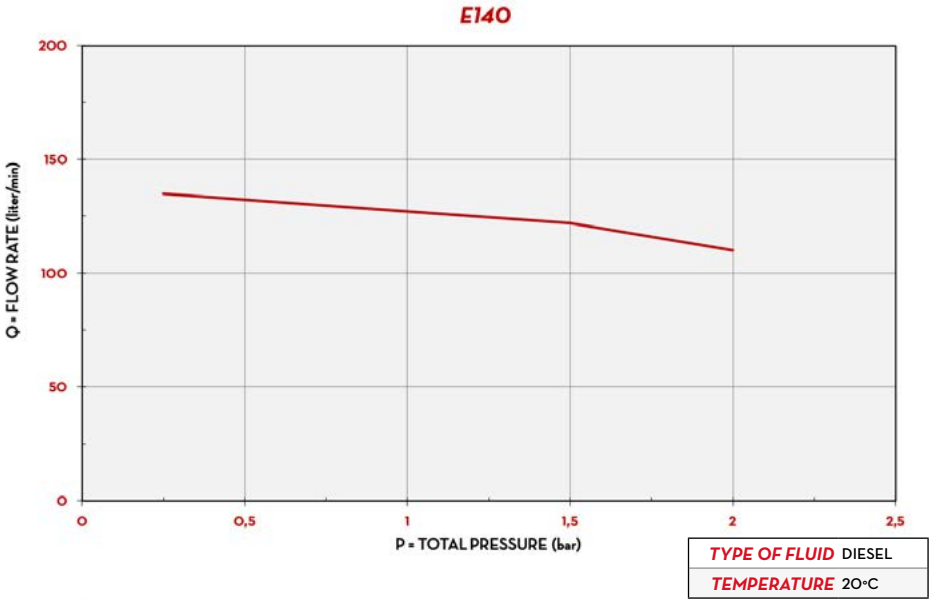

IN THE BOX

- E140 PUMP
- INSTRUCTION MANUAL

DETAILS

BYPASS VALVE

VANE ROTOR

DIMENSIONS

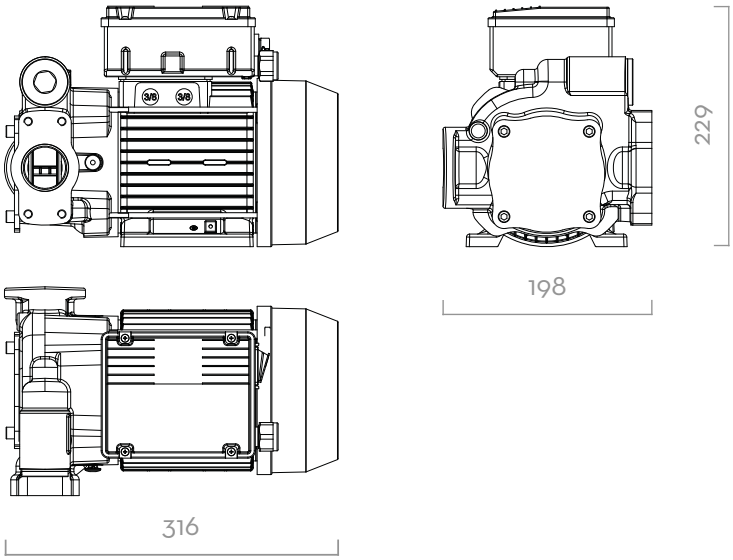

Dimensions expressed in millimeters

MATERIALS

- BODY: CAST IRON
- ROTOR: SINTERED STEEL
- VANES: TECHNOPOLYMER
- SEAL: VITON
- SHAFT: STEEL

TECHNICAL DATA

CODE	DESCRIPTION	FLUIDS TYPE	FLOW RATE		VOLTAGE			DUTY CICLE	RPM	INLET	OUTLET
			L/MIN	GPM	AC VOLT/HZ	POWER WATT	AMP. MAX.	CONTINUOUS		BSP	
F00395060	E 140 250/50	D	140	37	250/50	1150	5	S1	1450	1" 1/4	1"
F00395050	E 140 230/50	D	140	37	230/50	1150	5	S1	1450	1" 1/4	1"

E300

FEATURES

- HIGH-FLOW PUMP
- STURDY STRUCTURE
- HEAVY DUTY APPLICATION
- IP44

The PIUSI E300 is an electric pump with open impeller suitable for all applications in which high-flows are required. Thus, it is the ideal equipment for topping up and transferring diesel from drums. It comes with an incorporated check valve in the suction port to prevent the siphon effect while ensuring automatic re-priming.

PERFORMANCE

UP TO 550 L/MIN FLOW RATE	AC CONTINUOUS DUTY POWER
1,8 BAR MAX OPERATING PRESSURE	

E300

PACKAGING

CODE	WEIGHT		PACKAGING		
	KG	LBS	MM	INCH	PCS/BOX
F00321000	28	61,7	220X420X330	8,7X16,5X13	1

CHART

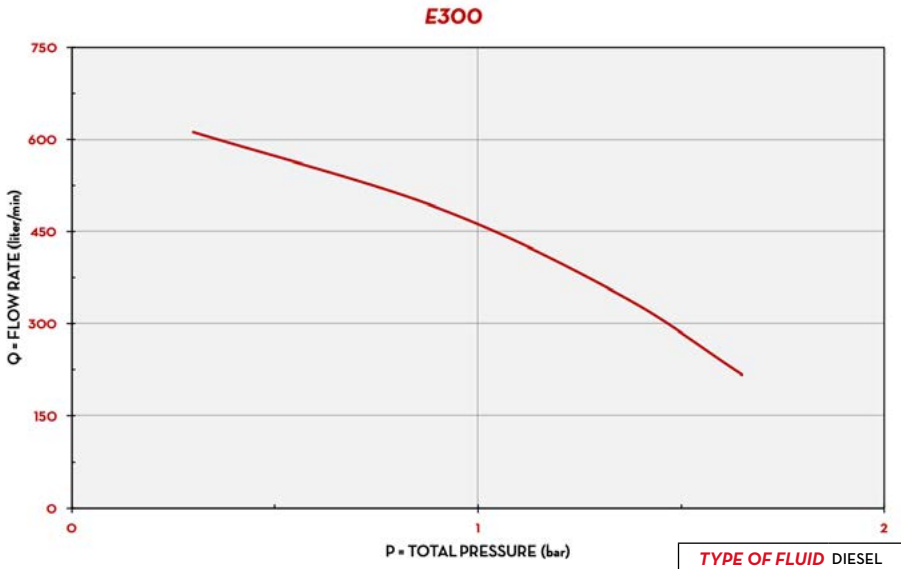

TYPE OF FLUID	DIESEL
TEMPERATURE	10°C

IN THE BOX

- E300 PUMP
- INSTRUCTION MANUAL

DETAILS

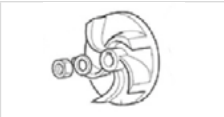

OPEN IMPELLER

2" IN/OUT CONNECTIONS

STEADY SUPPORT

DIMENSIONS

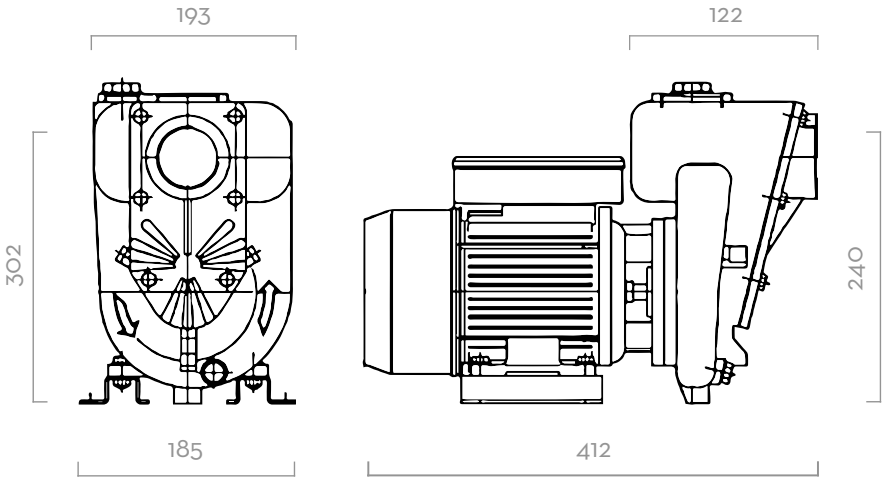

Dimensions expressed in millimeters

MATERIALS

- BODY: CAST IRON
- ROTOR: SINTERED STEEL
- VANES: ACETAL RESIN
- SEAL: VITON
- SHAFT: STEEL

TECHNICAL DATA

CODE	DESCRIPTION	FLUIDS TYPE	FLOW RATE		VOLTAGE			RPM	INLET OUTLET
			L/MIN	GPM	AC VOLT/HZ	POWER WATT	AMP. MAX.		BSP
F00321000	E 300	D	550	132	230/50	1500	9,2	2580	2"

PIUSI 3000 SUPREME

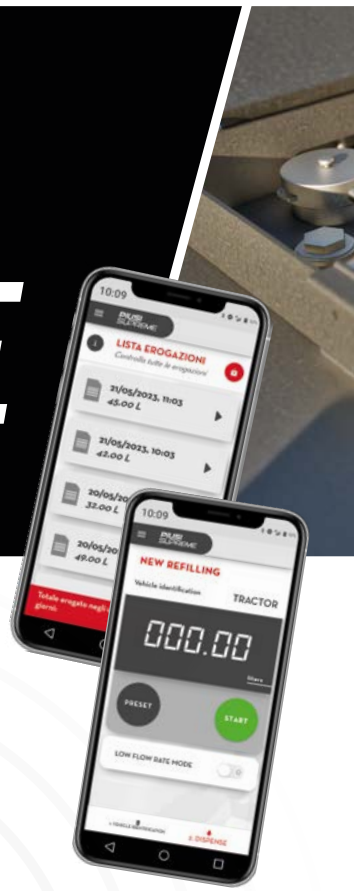

READY FOR A NEW GENERATION OF REFUELLING PUMPS?

THE PROBLEMS TYPICALLY ASSOCIATED WITH REFUELLING FROM TRANSPORTABLE TANKS

1. **Security:** is the pump operated by a simple ON button, making it susceptible to unauthorised fuel withdrawals?
2. **Unknown withdrawals:** are you in doubt about who has withdrawn fuel and when?
3. **Overheating:** does the pump overheat when dispensing fuel to vehicles with large fuel tanks?
4. **Failures or malfunctions:** has the pump suffered damage as a result of being connected to the wrong voltage?

PIUSI 3000 SUPREME IS THE SOLUTION!

1. **Dedicated app –** Secure, controlled and traceable fuel access, only to authorised users in possession of a security PIN
2. **Flow Control Technology –** Automatically reduces the flow rate in the event of overheating. You can also reduce the flow rate manually, from an app, if you want to dispense fuel into small cans
3. **Multi-Battery Technology –** Multi-voltage power supply from 12V to 24V*, with protection in the event of connection with reversed polarity

* The Piusi 3000 Supreme does not have the ability to monitor the battery and does not provide any type of protection for it.

3 VERSIONS COVERING A FULL RANGE OF NEEDS

	SITE DIMENSIONS		
	1 pump		2 or more pumps
	PIUSI SUPREME	PIUSI SUPREME PRO	B.SMART
Integrated flow control	✓	✓	✓
Login with security PIN	✓	✓	✓
Delivery time-out	✓	✓	✓
Preset function	✓	✓	✓
User Management	Up to 2 users	Up to 10 users	Up to 500 users for each dispenser, unlimited in the system
Dispense history	Last 20	Latest 100, downloadable with CSV file	Filterable report by date
Dispense calendar	-	✓ in the app	✓ in the webapp with filterable report by date
Total dispensed	-	✓ in the last 30 days	✓ Filterable report by date
In-app reminder/To do list	-	✓	-
Level indicator managemehnt	-	-	✓ with the TANK WATCHDOG add-on
Consumption management of vehicles and users	-	-	✓ with the FUEL ECONOMY add-on
Geolocation of dispenses	-	-	✓ with the MAPLY add-on

It is possible to upgrade to the higher version even after purchasing the pumph

SOFTWARE UPGRADE (ONE TIME FEE)

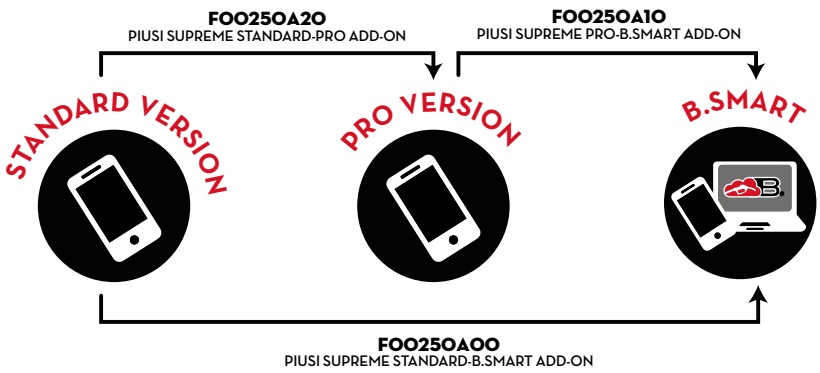

ALREADY IN B.SMART?

Buy a Discovery B.SMART ADD-ON for each PIUSI 3000 SUPREME and add it to your site code.

F00770500
PIUSI SUPREME DISCOVERY B.SMART
+10 DRIVERS INCLUDED

PIUSI 3000 SUPREME

FEATURES

- VOLTAGE FROM 12 TO 24V*
- BLUETOOTH CONNECTION
- TOTAL CONTROL VIA APP
- VIBRATION RESISTANCE
- LOW NOISE
- COMPATIBLE WITH DIESEL UP TO B20 - HVO/XTL
- MAX. PRESSURE 1,5 BAR
- IP55

The **PIUSI 3000 SUPREME** is a highly innovative device designed to offer full pump control and management from a smartphone app, thus helping users fill up with diesel from mobile tanks quickly and safely.

The PIUSI 3000 SUPREME combines new digital technologies with PIUSI's long and proven track-record in the design of fluid management systems such as pumps and flow meters. This new pump is designed to dispense diesel, measure the volume dispensed, manage operator access and solve the problems typically faced by users of transportable tanks.

PERFORMANCE

UP TO 50 L/MIN	FROM 12V TO 24V*
FLOW RATE	VOLTAGE
CONTINUOUS DUTY	±0,5%
DUTY CYCLE	ACCURACY

* The Piusi 3000 Supreme does not have the ability to monitor the battery and does not provide any type of protection for it.

PIUSI 3000 SUPREME

PACKAGING

CODE	WEIGHT		PACKAGING		
	KG	LBS	MM	INCH	PCS/BOX
F00250H00	8	17,6	270X190X180	-	1
F00250V00	8	17,6	270X190X180	-	1
F00250D00	8	17,6	300X300X180	-	1
F00250K00	15	33	490X390X310	-	1
F00250D10	15	33	490X390X310	-	1

BASE BRACKET KIT

2" DIRECT MOUNT KIT

IN THE BOX

- PUMPS
- SUCTION FILTER (BASE BRACKET KIT)
- DELIVERY HOSE
- AUTOMATIC NOZZLE A60
- ELECTRIC CABLE 4M
- OIL & FUEL FILTER (2" DIRECT MOUNT)
- 2" SUCTION CONNECTION (2" DIRECT MOUNT KIT)
- BASE BRACKET (BASE BRACKET KIT)
- NOZZLE HOLDER (2" DIRECT MOUNT KIT)
- ACCESS KEY (1PZ)
- INSTRUCTION MANUAL

DETAILS

BENDING PROTECTION

ELECTRIC CABLE

OIL & FUEL FILTER

AUTOMATIC NOZZLE A60

DIMENSIONS

BASE BRACKET KIT

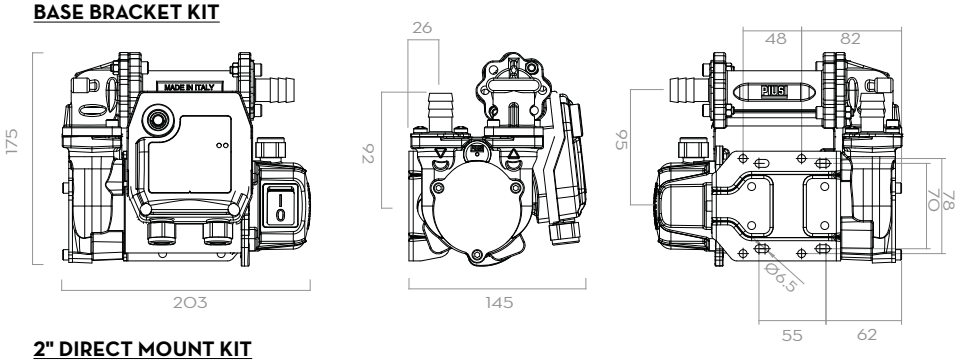

2" DIRECT MOUNT KIT

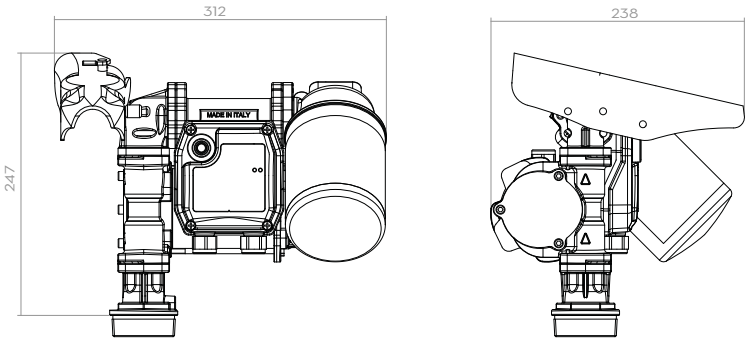

Dimensions expressed in millimeters

COMPONENTS

- BODY: CAST IRON
- ROTOR: SINTERED STEEL
- VANES: ACETAL RESIN
- SEAL: NBR
- SHAFT: STEEL

ACCESSORIES

- AUTOMATIC NOZZLE A60 + HOOK COD. F00603S00 (2" DIRECT MOUNT KIT)
- AUTOMATIC NOZZLE A60 COD. F00603060 (BASE BRACKET KIT)
- DIESEL HOSE 4M (COD. F24103000)

TECHNICAL DATA

CODE	DESCRIPTION	FLUIDS TYPE	FLOW RATE		VOLTAGE			RPM	DUTY CYCLE CONTINUOUS	FUSES CAPACITY	HOSE		SPIN ON FILTER	NOZZLE
			L/MIN	GPM	DC VOLT	POWER WATT	AMP. MAX.			AMPERE	LENG.	Ø		
F00250H00	PIUSI 3000 SUPREME PUMP ONLY B.O.	D	50	13	FROM 12 TO 24	200W	16A/8A	2700	YES	25A	-	-	-	-
F00250V00	PIUSI 3000 SUPREME PUMP ONLY B.V.	D	50	13	FROM 12 TO 24	200W	16A/8A	2700	YES	25A	-	-	-	-
F00250D00	PIUSI 3000 SUPREME PUMP ONLY DRUM	D	50	13	FROM 12 TO 24	200W	16A/8A	2700	YES	25A	-	-	YES	-
F00250K00	PIUSI 3000 SUPREME BASE BRACKET KIT	D	50	13	FROM 12 TO 24	200W	16A/8A	2700	YES	25A	4MT	3/4"	-	A60
F00250D10	PIUSI 3000 SUPREME 2" DIRECT MOUNBT KIT	D	50	13	FROM 12 TO 24	200W	16A/8A	2700	YES	25A	4MT	3/4"	YES	A60

BP3000

FEATURES

- VERSATILE
- ON BOARD APPLICATION
- EMC COMPATIBILITY
- VIBRATION RESISTANT
- IP55

The PIUSI BP3000 is a long-lasting, self-priming vane pump. Powerful, versatile and compact, it is equipped with a built-in by-pass valve. Available in both 12V and 24V versions, it represents the core of the PIUSI range of pumps for on-board applications, particularly in the off-road and earthmoving machinery industry.

BP3000 INLINE

BP3000

BP3000 BIO

BIO diesel VERSION AVAILABLE

PERFORMANCE

UP TO 50 L/MIN — FLOW RATE	DC VOLTAGE — POWER
30 MIN — DUTY CICLE	UP TO 4MT — SELF-PRIMING

PACKAGING

CODE	WEIGHT		PACKAGING		
	KG	LBS	MM	INCH	PCS/BOX
F00342000	3,5	7,9	200X120X140	7,9X4,7X5,5	1
F00347000	3,5	7,9	200X120X140	7,9X4,7X5,5	1
F00357000	3,5	7,9	200X120X140	7,9X4,7X5,5	1
F00357500	3,5	7,9	200X120X140	7,9X4,7X5,5	1
F00358000	3,5	7,9	200X120X140	7,9X4,7X5,5	1
F00358500	3,5	7,9	200X120X140	7,9X4,7X5,5	1
F00342B00	3,5	7,9	200X120X140	7,9X4,7X5,5	1

ANY BIODIESEL | AIR | ANTIFREEZE | AdBlue® | BIODIESEL | DIESEL | FOOD | GASOLINE | GREASE | KEROSENE | OIL | WATER | WINDSCREEN

CHART

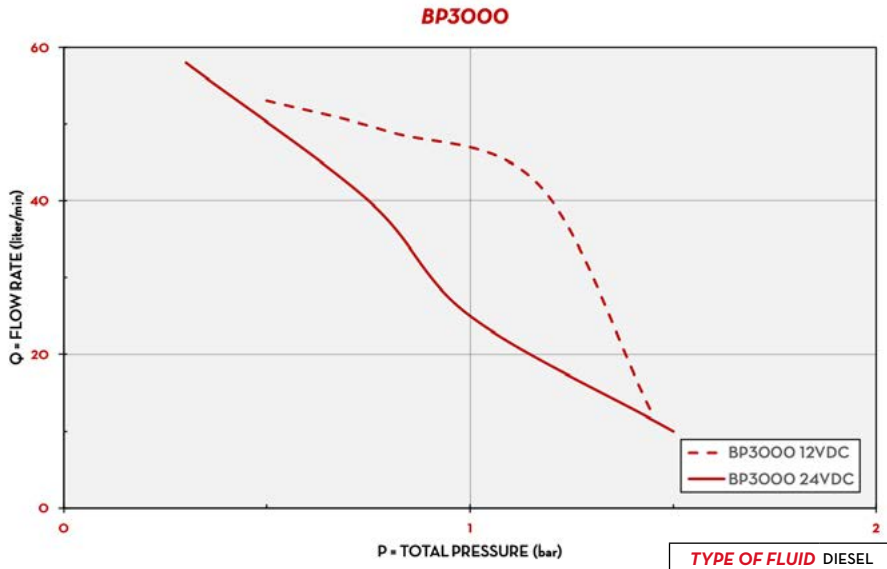

TYPE OF FLUID	DIESEL
TEMPERATURE	20°C

IN THE BOX

- BP3000 PUMP
- INSTRUCTION MANUAL

DETAILS

VANE ROTOR

IN-LINE VERSION AVAILABLE

CONNECTION KIT

DIMENSIONS

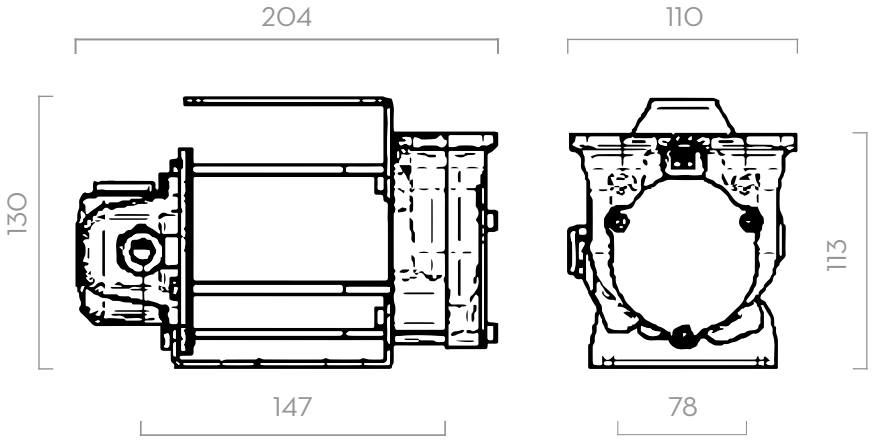

Dimensions expressed in millimeters

MATERIALS

- BODY: CAST IRON
- ROTOR: SINTERED STEEL
- VANES: ACETAL RESIN
- SEAL: NBR
- SHAFT: STEEL

PUMP ← TANK

- MAX 6M (20FT),
- SUCTION HOSE Ø 1" MIN,
- MAX SUCTION HEIGHT:
  - 2M (7FT) W/O NON RETURN VALVE
  - 4M (14FT) W NON RETURN VALVE

TECHNICAL DATA

CODE	DESCRIPTION	FLUIDS TYPE	FLOW RATE		VOLTAGE			DUTY CYCLE	RPM	THREADED PORTS BSP	MAX WORKING PRESSURE BAR
			L/MIN	GPM	DC VOLT	POWER WATT	AMP. MAX.	MINUTES			
F00342000	BP3000 12V	D	50	13	12	300	24	30	2900	-	1,5
F00347000	BP3000 24V	D	50 / 30	13 / 6	24/12	310 / 80	13 / 6,5	30	2900 / 1500	-	1,5
F00357000	BP3000 12V INLINE	D	50	13	12	300	24	30	2900	-	1,5
F00357500	BP3000 12V INLINE 3/4' BSP	D	50	13	12	300	24	30	2900	3/4"	1,5
F00358000	BP3000 24V INLINE	D	50 / 30	13 / 6	24/12	310 / 80	13 / 6,5	30	2900 / 1500	-	1,5
F00358500	BP3000 24V INLINE 3/4' BSP	D	50 / 30	13 / 6	24/12	310 / 80	13 / 6,5	30	2900 / 1500	3/4"	1,5
F00342B00	BP3000 12V B100	BIO D	50	13	12	300	24	30	2900	-	1,5

BP3000

PANTHER DC

FEATURES

- STURDY STRUCTURE
- EASY TO INSTALL
- COMPACT DESIGN
- IP55

The PANTHER DC is a rotary, self-priming vane pump suitable for all applications in which important flow rates are required. This equipment is fitted with an incorporated filter (100µ) and by-pass valve. The 24/12 V version can be used with both voltages.

PANTHER DC

PERFORMANCE

UP TO 70 L/MIN FLOW RATE	12/24V VOLTAGE POWER
30 MIN DUTY CICLE	

PACKAGING

CODE	WEIGHT		PACKAGING		
	KG	LBS	MM	INCH	PCS/BOX
F0034000B	7,5	16,5	345X175X255	13,6X6,9X10	1
F0034001B	7,5	16,5	345X175X255	13,6X6,9X10	1
F0034100C	7,5	16,5	345X175X255	13,6X6,9X10	1
F0034101C	7,5	16,5	345X175X255	13,6X6,9X10	1
F0034116C	7,5	16,5	345X175X255	13,6X6,9X10	1

ANY BIODIESEL | AIR | ANTIFREEZE | AdBlue® | BIODIESEL | DIESEL | FOOD | GASOLINE | GREASE | KEROSENE | OIL | WATER | WINDSCREEN

CHART

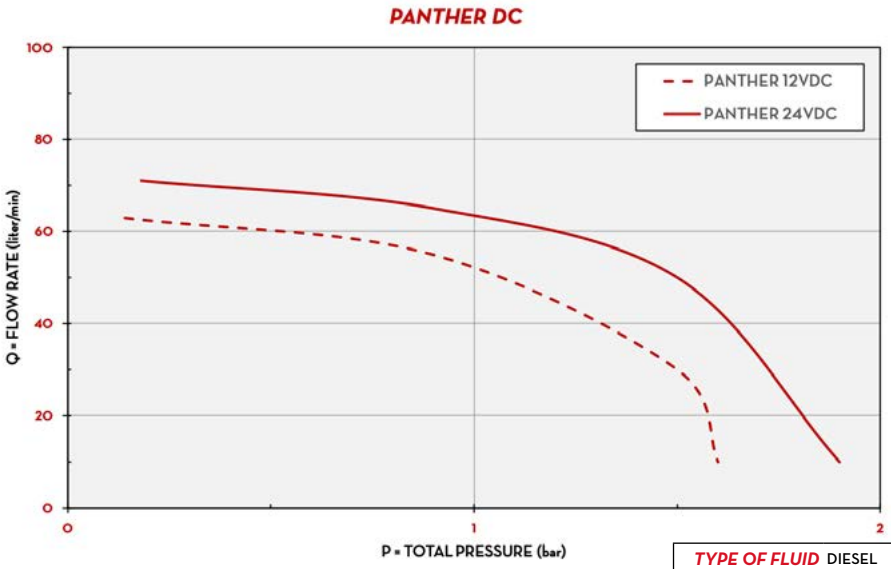

TYPE OF FLUID	DIESEL
TEMPERATURE	22°C

IN THE BOX

- PANTHER DC PUMP
- INSTRUCTION MANUAL

DETAILS

ON/OFF SWITCH

1" BSP THREADED

INTEGRATED FILTER

DIMENSIONS

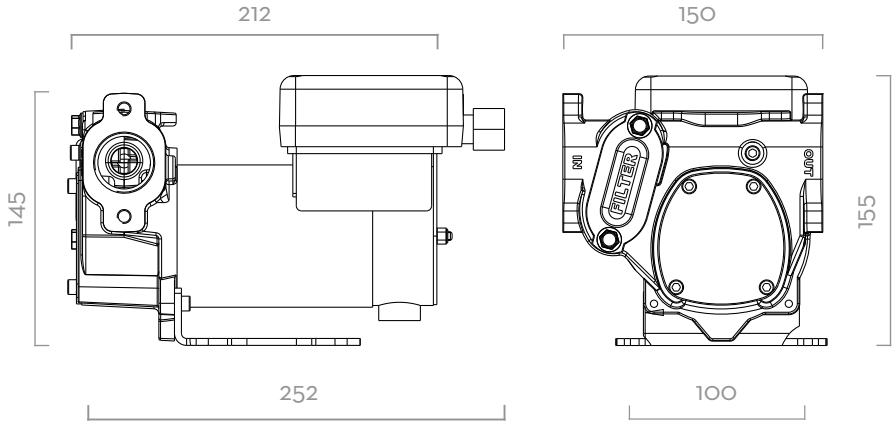

Dimensions expressed in millimeters

MATERIALS

- BODY: CAST IRON
- ROTOR: SINTERED STEEL
- VANES: ACETAL RESIN
- MOTOR: ALUMINIUM CASING

PUMP ← TANK

- MAX 6M (20FT),
- SUCTION HOSE Ø 1" MIN,
- MAX SUCTION HEIGHT:
  - 2M (7FT) W/O NON RETURN VALVE
  - 4M (14FT) W NON RETURN VALVE

TECHNICAL DATA

CODE	DESCRIPTION	FLUIDS TYPE	FLOW RATE		VOLTAGE			DUTY CICLE	RPM	OUTLET
			L/MIN	GPM	DC VOLT	POWER WATT	AMP. MAX.	MINUTES		BSP
F0034000B	PANTHER DC 12V	D	56	14,8	12	300	35	30	2900	1"
F0034001B	PANTHER DC 12V W/CABLE 2MT W/PLIERS	D	56	14,8	12	300	35	30	2900	1"
F0034100C	PANTHER DC 24/12V	D	70 / 35	18,5 / 9,2	24/12	420 / 150	25 / 16	30	3600 / 1800	1"
F0034101C	PANTHER DC 12/24V W/CABLE 2MT W/CLIPS	D	70 / 35	18,5 / 9,2	24/12	420 / 150	25 / 16	30	3600 / 1800	1"
F0034116C	PANTHER DC 12/24V W/CABLE 4MT W/CLIPS	D	70 / 35	18,5 / 9,2	24/12	420 / 150	25 / 16	30	3600 / 1800	1"

PANTHER DC

BIPUMP

FEATURES

- STURDY STRUCTURE
- COMPACT DESIGN
- HEAVY DUTY
- HIGH RELIABILITY
- IP55

The PIUSI BIPUMP is a diesel transfer pump, available both in 12 and 24 V versions, designed to meet the needs of those who are looking for a long-lasting quality, high flow rate pump, applicable to different industries. It is easy to install and is suitable for being applied on diesel dispensers and fixed fuel transfer systems, as well as other applications.

PERFORMANCE

UP TO 85 L/MIN	12/24V VOLTAGE
FLOW RATE	POWER
30 MIN	
DUTY CICLE	

BIPUMP

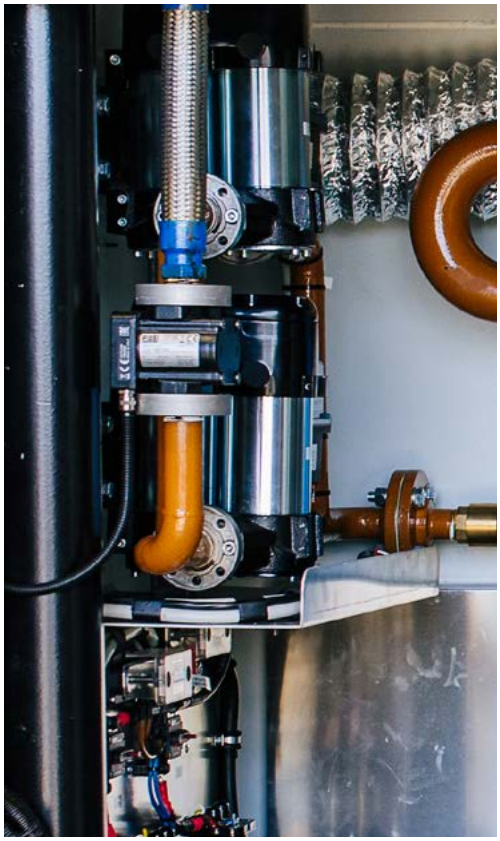

PACKAGING

CODE	WEIGHT		PACKAGING			N. BOXES / EUROPALLET	
	KG	LBS	MM	INCH	PCS/BOX	✈	🚢
F00363A0A	12,7	28,1	345X175X255	-	1	60	72
F00363B0A	12,6	27,9	345X175X255	-	1	60	72
F0036301A	9,9	21,8	345X175X255	-	1	60	72
F0036302A	9,9	21,8	345X175X255		1	60	72
F0036303A	9,9	21,8	345X175X255	-	1	60	72
F0036304A	9,9	21,8	345X175X255	-	1	60	72
F0036321A	12,36	27,2	345X175X255	-	1	60	72
F0036338O	9,9	21,8	345X175X255	-	1	60	72

ANY BIODIESEL | AIR | ANTIFREEZE | AdBlue® | BIODIESEL | DIESEL | FOOD | GASOLINE | GREASE | KEROSENE | OIL | WATER | WINDSCREEN

CHART

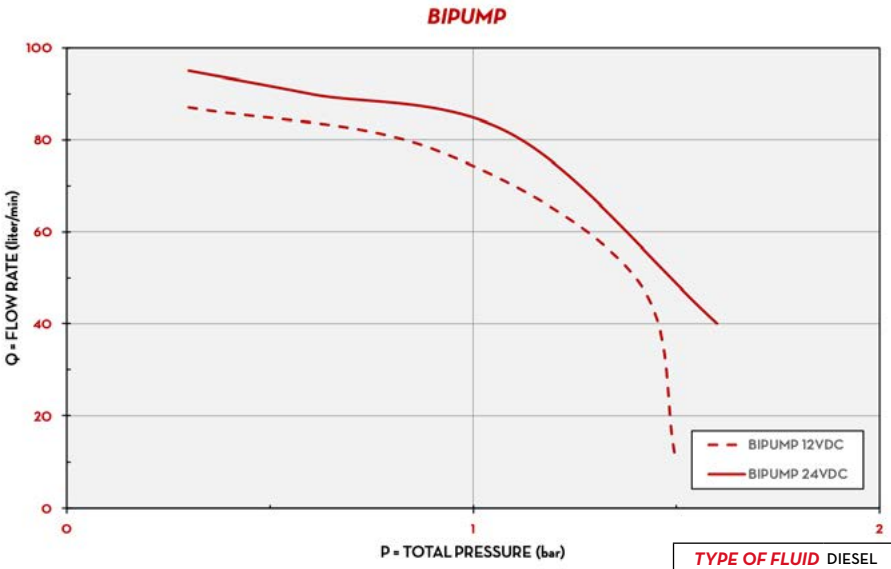

TYPE OF FLUID	DIESEL
TEMPERATURE	15°C

IN THE BOX

- BIPUMP UNIT
- FLANGED CONNECTIONS
- INSTRUCTION MANUAL

DETAILS

ON/OFF SWITCH

FLANGED CONNECTIONS

DIMENSIONS

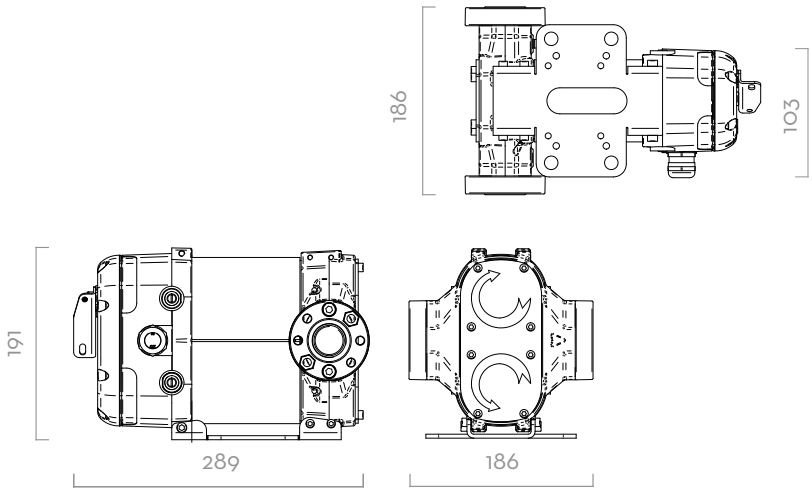

Dimensions expressed in millimeters

MATERIALS

- BODY: CAST IRON
- ROTOR: SINTERED STEEL
- VANES: ACETAL RESIN
- SEAL: NBR
- SHAFT: STEEL

PUMP ← TANK

- MAX 6M (20FT),
- SUCTION HOSE Ø 1" MIN,
- MAX SUCTION HEIGHT:
  - 2M (7FT) W/O NON RETURN VALVE
  - 4M (14FT) W NON RETURN VALVE

TECHNICAL DATA

CODE	DESCRIPTION	FLUIDS TYPE	FLOW RATE		VOLTAGE			DUTY CICLE	RPM	OUTLET
			L/MIN	GPM	DC VOLT	POWER WATT	AMP. MAX.	MINUTES		BSP
F00363A0A	BIPUMP 12V WITH ON/OFF SWITCH	D	85	22,4	12	500	42	30	2000	1"
F00363B0A	BIPUMP 24V WITH ON/OFF SWITCH	D	85	22,4	24	500	21	30	2000	1"
F0036301A	BIPUMP 12V WITH CABLE 2M	D	85	22,4	12	500	42	30	2000	1"
F0036302A	BIPUMP 12V WITH CABLE 4M	D	85	22,4	12	500	42	30	2000	1"
F0036303A	BIPUMP 24V WITH CABLE 2M	D	85	22,4	24	500	21	30	2000	1"
F0036304A	BIPUMP 24V WITH CABLE 4M	D	85	22,4	24	500	21	30	2000	1"
F0036321A	BIPUMP 12/24 WITHOUT ON/OFF SWITCH	D	85	22,4	12/24	500/500	42/21	30/30	2000	1"
F0036338O	BIPUMP 12V W/SWITCH W/CABLE 6M	D	85	22,4	12	500	42	30	2000	1"

PIUSI HAND PUMP

FEATURES

- OPTIMIZED SUCTION CAPACITY
- STURDY CONNECTOR
- HEAVY DUTY LEVER
- FLUENT REVOLUTION
- HIGH EFFICIENCY
- ADJUSTABLE SUCTION PIPE

The PIUSI HAND PUMP is a rotary vane pump suitable for transferring low viscosity oils and diesel. Entirely designed, manufactured and certified in Italy, this sturdy pump guarantees a professional performance and easy transfer.

PERFORMANCE

UP TO 38L PER 100 REVOLUTIONS	3MT LENGTH
FLOW RATE	DELYVERY HOSE

PIUSI HAND PUMP WITH HOSE AND STAINLESS STEEL SPOUT

PACKAGING

CODE	WEIGHT		PACKAGING			N. BOXES / EUROPALLET	
	KG	LBS	MM	INCH	PCS/BOX	✈	🚢
WITHOUT HOSE							
F0033250A	2,1	4,6	350X170X140	-	1	50	100
WITH HOSE							
F0033252A	3,2	7	300X300X180	-	1	50	100

ANY BIODIESEL | AIR | ANTIFREEZE | AdBlue® | BIODIESEL | DIESEL | FOOD | GASOLINE | GREASE | KEROSENE | OIL | WATER | WINDSCREEN

CHART

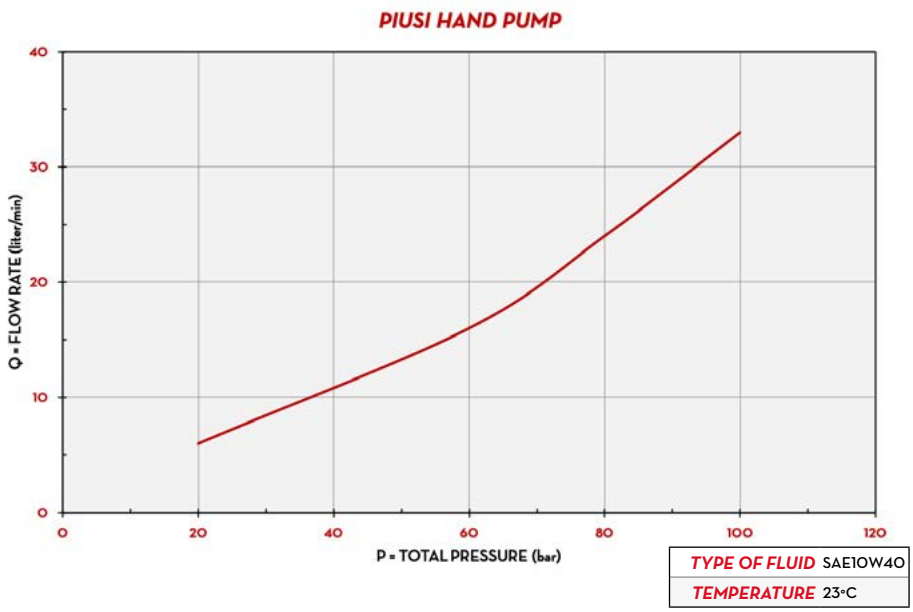

IN THE BOX

- PIUSI HAND PUMP
- SPOUT
- SUCTION PIPE
- DRUM CONNECTOR
- INSTRUCTION MANUAL

DETAILS

2" BSP DRUM CONNECTOR

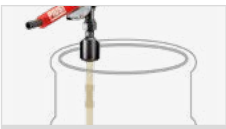
SUCTION PIPE

NON-SLIP HANDLE

STAINLESS STEEL SPOUT

DIMENSIONS

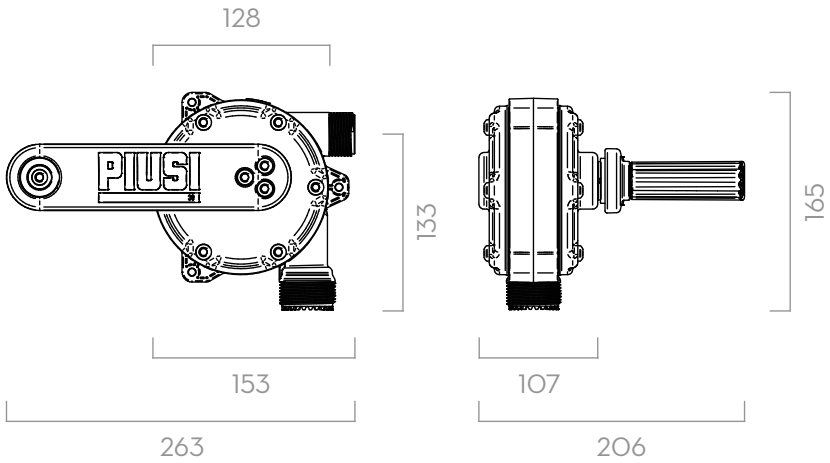

Dimensions expressed in millimeters

MATERIALS

- BODY: STAINLESS STEEL, TECHONOPOLYMER
- ROTOR: TECHNOPOLYMER
- VANES: TECHNOPOLYMER

TECHNICAL DATA

CODE	DESCRIPTION	FLUIDS TYPE	CAPACITY PER 100 REVOLUTIONS		DRUM CONNECTOR	SUCTION TUBE	"S" SPOUT AND HOSE TAIL	DELIVERY HOSE LENGTH
			L	USG				
WITHOUT HOSE								
F003325OA	PIUSI HAND PUMP 2" BSP	D O	38	10	2" BSP	YES	YES	-
WITH HOSE								
F003325 2A	KIT PIUSI HAND PUMP 2" BSP WITH HOSE	D O	38	10	2" BSP	YES	-	3M

PIUSI HAND PUMP

HAND PUMPS

FEATURES

- STURDY CONNECTOR
- SUCTION PIPE INCLUDED
- MULTI-PURPOSE PUMPS

Besides the top-quality Hand Pump, PIUSI offers a range of HAND PUMPS with different characteristics - piston or rotary - and fittings to transfer fluids from drums.

PERFORMANCE

UP TO 90L PER 100 REV	UP TO 1100MM LENGTH
FLOW RATE	SUCTION HOSE

PM GPI PISTON

PACKAGING

CODE	WEIGHT		PACKAGING			N. BOXES / EUROPALLET	
	KG	LBS	MM	INCH	PCS/BOX	✈	🚢
F0031600A	5,3	11,7	465X395X240	-	1	30	40
F0033200B	5,6	12,3	340X160X125	-	1	120	144
F0034900B	3,0	6,6	600X110X65	-	1	160	240
F0035100B	3,0	6,6	300X150X105	-	1	160	200

ANY BIODIESEL · AIR · ANTIFREEZE · AdBlue® · BIODIESEL · DIESEL · FOOD · GASOLINE · GREASE · KEROSENE · OIL · WATER · WINDSCREEN

PISTON HAND PUMP

ALUMINIUM ROTATIVE

IN THE BOX

- ROTARY/PISTON PUMP
- SUCTION TUBE
- CONNECTOR/ADAPTOR
- SPOUT/DELIVERY HOSE
- INSTRUCITON MANUAL

DETAILS

NON-SLIP HANDLE

PISTON HAND PUMP

MATERIALS

- BODY: IRON/STAINLESS STEEL/ALUMINIUM

TECHNICAL DATA

CODE	DESCRIPTION	FLUIDS TYPE	CAPACITY L / 100REV	INLET / OUTLET	SUCTION HOSE LENGTH MM
F0031600A	PM GPI PISTON	O D G K	90	1-3/4" NPT	1100
F0033200B	ALUMINIUM ROTATIVE HAND PUMP	O D G K	27	M32 X 1,5 - M25 X 1,5	960
F0034900B	PISTON HAND PUMP 25 L/M	D O	25	END HOSE Ø 20	880
F0035100B	PISTON HAND PUMP 35 L/M	D O	35	END HOSE Ø 20	880

HAND PUMPS

PUMPS ACCESSORIES

POMPE ATEX AC/DC

EX50	CODE	DESCRIPTION
	F1862600A	(EX)CABLE+CABLEGLAND ECEX EX50 12V
	F1815600B	(EX) ADAPTER FOR CONDUIT EX50
	F1862400C	(EX) PRESSACAVO EXxd1/2NPT IECEx

F1815600B

F1862600A

EX100	CODE	DESCRIPTION
	F21770000	BUNG ADAPTER 2" BSP COMPLETE
	F22436010	ANTISIPHONE KIT FOR EX100/EX140/E140 BSP
	F22053000	MOTOR SUPPORT FEET EX80/100/140

F22436010

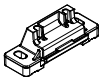
F22053000

F21770000

EX140	CODE	DESCRIPTION
	F21770000	BUNG ADAPTER 2" BSP COMPLETE
	F22436010	ANTISIPHONE KIT FOR EX100/EX140/E140 BSP
	F22053000	MOTOR SUPPORT FEET EX80/100/140

F22436010

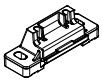
F22053000

F21770000

HAND PUMP

PIUSI HAND PUMP	CODE	DESCRIPTION
	F15236000	ADATTATORE M\F 2IN - 56X4 ADBLUE
	R1512800A	ADAPTER M/F 2" - S70X6 ADBLUE

R1512800A

F15236000

POMPE AC/DC

E80 / E120	CODICE	DESCRIZIONE
	F1392000A	KIT ANTI-SYPHON FOR P56/72 E80/120

F1392000A

E140	CODICE	DESCRIZIONE
	F22436010	ANTISIPHONE KIT FOR EX100/EX140/E140 BSP

F22436010

BP3000	CODICE	DESCRIZIONE
	F1701800A	KIT TERMINAL BOX+4M CABLE W\CLAMP 12-24V
	F1728900A	KIT TERMINAL BOX+2M CABLE W\CLAMP 12-24V
	F1729000A	KIT TERMINAL BOX+6M CABLE W\CLAMP 12-24V
	R1601100B	ELECTRICAL BOX WITH SWITCH BP3000

R1601100B

F1701800A
F1729000A
F1728900A

SPECIFIC CONNECTIONS FOR BP3000

F1617300A	LP 3/4 90° HOSE TAIL KIT (1 PCS.)
F1726200A	HOSE TAIL 90° 1"

F16178000	LP 90° FLANGED ELBOW-NEW
F16770000	KIT N.1 ELBOW 90° WITHOUT FLANGE

F16172000	LP 3/4 STRAIGHT HOSE TAIL KIT (2 PCS.)-N
F17124000	STRAIGHT HOSE TAIL 1" BP3000

F16799000	FLANGED ADAPTER BP3000-VANTAGE 1"G-F
F17313000	FLANGED ADAPTER BP3000 \ VANTAGE 1ING -
F17314000	FLANGED ADAPTER BP3000\VANTAGE 3/4ING -F

PANTHER DC	CODICE	DESCRIZIONE
	F1001100A	CABLE 2X6X2 MT EYELET TERMINAL 12V
	F1004000A	CABLE 2X6X2 MT EYELET TERMINAL 24V
	F1004100A	CABLE 2X6X4 MT EYELET TERMINAL 12V
	F1003900A	CABLE 2X6X4 MT EYELET TERMINAL 24V
	R13242000	KIT MANIGLIA PANTHER DC

R10011000
R10040000
R10041000
R10039000

R13242000

BIPUMP	CODICE	DESCRIZIONE
	F1420000B	KIT MANIGLIA BIPUMP
	F1433400A	CABLE 2X6X2MT BIPUMP
	F1433500A	CABLE 2X6X4MT BIPUMP

R14334000
R14335000

R1420000A

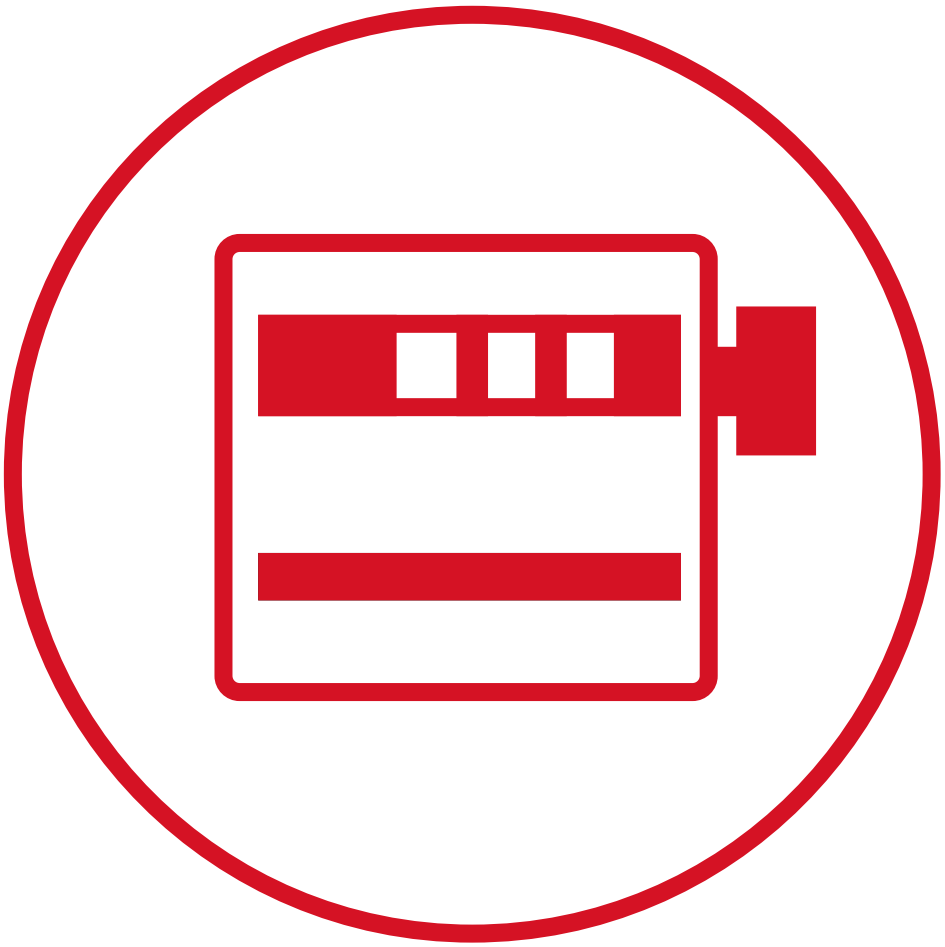

METERS

K24 ATEX

FEATURES

- BURSTING PRESSURE 100 BAR
- LCD DISPLAY
- FLOW RATE INDICATION
- EASY TO CALIBRATE
- UL VERSION AVAILABLE

The PIUSI K24 ATEX, specifically designed to be compliant with ATEX/IECEx requirements, is manufactured using high-quality materials compatible with gasoline, kerosene and diesel to be used in potentially explosive areas.
This turbine flow meter is equipped with a 6-digit totalizer and partial reset.

Atex

II 2 G

CLASSIFIED c UL us

K24 ATEX / IECEX

PERFORMANCE

7-120 L/MIN FLOW RATE	20 BAR MAX OPERATING PRESSURE
± 1% ACCURACY	0,3% REPEATABILITY

OUR PRODUCT COMPLIES WITH THE FOLLOWING MARKING ATEX/IECEx

II	2	G	Ex	ia	IIB	T4	Gb
GROUP	CATEGORY	TYPE OF EXPLOSIVE ATMOSPHERE	PERMANENT PREFIX	PROTECTION METHOD	GAS GLASS	TEMPERATURE CLASS	EQUIPMENT PROTECTION LEVEL

PACKAGING

CODE	WEIGHT		PACKAGING		
	KG	LBS	MM	INCH	PCS/BOX
K24 A ATEX/IECEX METER					
FOO408XOO	0,65	1,4	115X160X135	4,5X6,3X5,3	1
K24 A ATEX/IECEX PULSER					
FOO408YOO	0,65	1,4	115X160X135	4,5X6,3X5,3	1

ANY BIODIESEL · AIR · ANTIFREEZE · AdBlue® · BIODIESEL · DIESEL · FOOD · GASOLINE · GREASE · KEROSENE · OIL · WATER · WINDSCREEN

CHART

IN THE BOX

- K24 ATEX METER
- INSTRUCTION MANUAL

DETAILS

ROTABLE DISPLAY

BI-DIRECTIONAL

TURBINE PULSE METER

DIMENSIONS

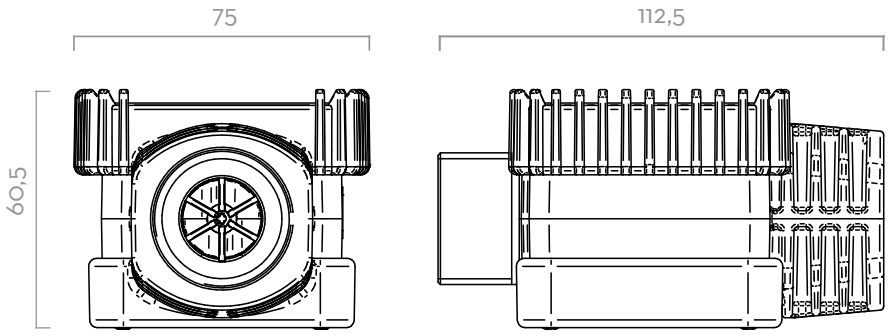

Dimensions expressed in millimeters

MATERIALS

- BODY: ALUMINIUM
- GEARS: TECHNOPOLYMER

TECHNICAL DATA

CODE	DESCRIPTION	FLUIDS TYPE	FLOW RATE		PRESSURE		SPECIAL BATTERY INCLUDED N° 1 3V LITHIUM	FLANGE	INLET / OUTLET
			L/MIN	GPM	BAR	PSI			
K24 A ATEX/IECEX METER									
F00408X00	K24 A M/F 1" BSP ATEX/IECEX	D G K	7 - 120	2 - 32	20	300	YES	NO	M 1" BSP - F 1" BSP
K24 A ATEX/IECEX PULSER									
F00408Y00	K24 A PULSER M/F 1" BSP ATEX/IECEX (92 PULSE/L)	D G K	7 - 120	2 - 32	20	300	NO	NO	M 1" BSP - F 1" BSP

FLUIDS PERMITTED: DIESEL, KEROSENE, PETROL, PETROL ALCOHOL MIXED MAX 20% ,
AVGAS 100/100LL (PUMP ONLY), JET A/A1 (PUMP ONLY) - ASPEN 2/4. UL CLASSIFIED VERSION AVAILABLE

K24 ATEX

K33 ATEX

FEATURES

- BURSTING PRESSURE 28 BAR
- 3 DIGIT DISPLAY
- EASY TO CALIBRATE
- 4 FLOW DIRECTIONS

The PIUSI K33 ATEX is an oval gear mechanical meter engineered for an accurate measuring of the quantity of fluid dispensed that meets the ATEX/IECEx requirements related to the use in potentially explosive atmospheres. Reliable and easy to install, it can be calibrated on site and simply fitted with both rigid or flexible pipes or can be put directly on pumps and tanks.

PERFORMANCE

20-120 L/MIN FLOW RATE	3,5 BAR MAX OPERATING PRESSURE
± 1% ACCURACY	0,3% REPEATABILITY

K33 - ATEX

OUR PRODUCTS COMPLIES WITH THE FOLLOWING MARKING ATEX

II	2	G	c	IIB	T6
GROUP	CATEGORY	TYPE OF EXPLOSIVE ATMOSPHERE	PROTECTION METHOD	GAS GLASS	TEMPERATURE CLASS

PACKAGING

CODE	WEIGHT		PACKAGING			N. BOXES / EUROPALLET	
	KG	LBS	MM	INCH	PCS/BOX	✈	🚢
F0057000A	2,02	4,44	180X180X170	-	1	192	240
F0057001A	2,02	4,44	180X180X170	-	1	192	240
F0057002A	2,02	4,44	180X180X170	-	1	192	240
F0057003A	2,02	4,44	180X180X170	-	1	192	240

ANY BIODIESEL · AIR · ANTIFREEZE · AdBlue® · BIODIESEL · DIESEL · FOOD · GASOLINE · GREASE · KEROSENE · OIL · WATER · WINDSCREEN

CHART

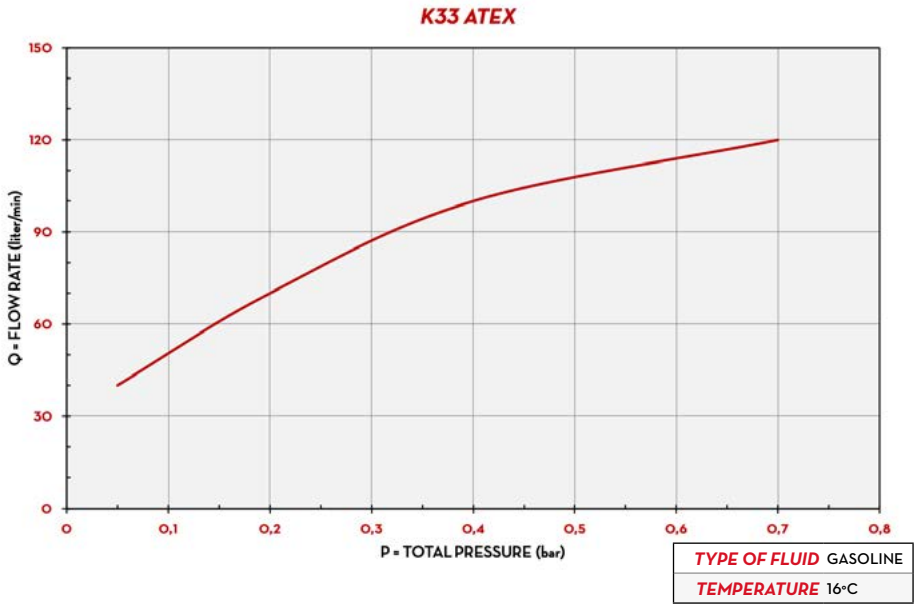

IN THE BOX

- K33 ATEX METER
- INSTRUCTION MANUAL

DETAILS

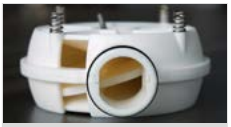
NUTATING DISK SYSTEM

4 FLOW DIRECTIONS

ATEX APPROVED

SAFETY BONDING

DIMENSIONS

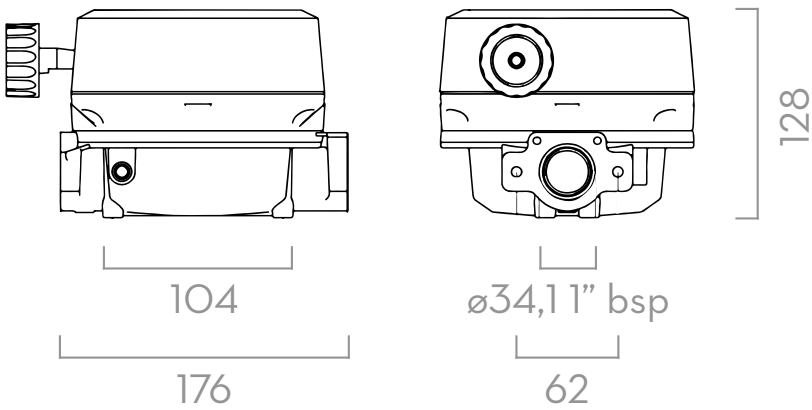

Dimensions expressed in millimeters

MATERIALS

- BODY: ALUMINIUM
- NUTATING DISK CHAMBER: TECHNOPOLYMER

TECHNICAL DATA

CODE	DESCRIPTION	FLUIDS TYPE	FLOW DIRECTION	FLOW RATE		PRESSURE		INLET / OUTLET
				L/MIN	GPM	BAR	PSI	
F0057000A	K33 - ATEX VER. A	D G K	←	20 - 120	5 - 32	3,5	50	1" BSP
F0057001A	K33 - ATEX VER. B	D G K	↑	20 - 120	5 - 32	3,5	50	1" BSP
F0057002A	K33 - ATEX VER. C	D G K	↓	20 - 120	5 - 32	3,5	50	1" BSP
F0057003A	K33 - ATEX VER. D	D G K	→	20 - 120	5 - 32	3,5	50	1" BSP

FLUIDS PERMITTED: DIESEL, KEROSENE, PETROL, PETROL ALCOHOL MIXED MAX 20% ,
AVGAS 100/100LL (PUMP ONLY), JET A/A1 (PUMP ONLY) - ASPEN 2/4. UL CLASSIFIED VERSION AVAILABLE

K33 ATEX

K150 ATEX

FEATURES

- HEAVY DUTY CONDITIONS
- HIGH FLOW RATE
- BURSTING PRESSURE 28 BAR
- EASY READING
- 4 FLOW DIRECTIONS

K150 ATEX is expressly engineered to meet the market requirements of a meter suitable for flow rates superior than 120 l/min and that can be used both for fluids such as diesel and biodiesel, as well as in potentially explosives atmosphere; with gasoline for example. K150 is easy to calibrate and ready to use; its aluminium cover and sturdy body make this meter suitable for a wide arrange of application while gua-ranteeing the same precision and quality that have always featured PIUSI equip-ment. The mechanical display allows to read quickly the quantity dispensed. It can be installed everywhere thanks to the (optional) 1,5" flange kit. K150 is certified CE, ATEX/UL and tested in PIUSI laboratories for over 4 milion litres to guarantee the maximum reliability.

PERFORMANCE

UP TO 25-150 L/MIN FLOW RATE	3,5 BAR MAX OPERATING PRESSURE
± 1% ACCURACY	0,3% REPEATABILITY

K150

OUR PRODUCTS COMPLIES WITH THE FOLLOWING MARKING ATEX

II	2	G	c	IIB	T6
GROUP	CATEGORY	TYPE OF EXPLOSIVE ATMOSPHERE	PROTECTION METHOD	GAS GLASS	TEMPERATURE CLASS

PACKAGING

CODE	WEIGHT		PACKAGING			BOXES/EUROPALLET	
	KG	LBS	MM	INCH	PCS/BOX	✈	🚢
F00555A00	2,38	5,25	185X185X170	7,28X7,28X6,69	1	192	240
F00555B00	2,38	5,25	185X185X170	7,28X7,28X6,69	1	192	240
F00555C00	2,38	5,25	185X185X170	7,28X7,28X6,69	1	192	240
F00555D00	2,38	5,25	185X185X170	7,28X7,28X6,69	1	192	240

ANY BIODIESEL · AIR · ANTIFREEZE · AdBlue® · BIODIESEL · DIESEL · FOOD · GASOLINE · GREASE · KEROSENE · OIL · WATER · WINDSCREEN

CHART

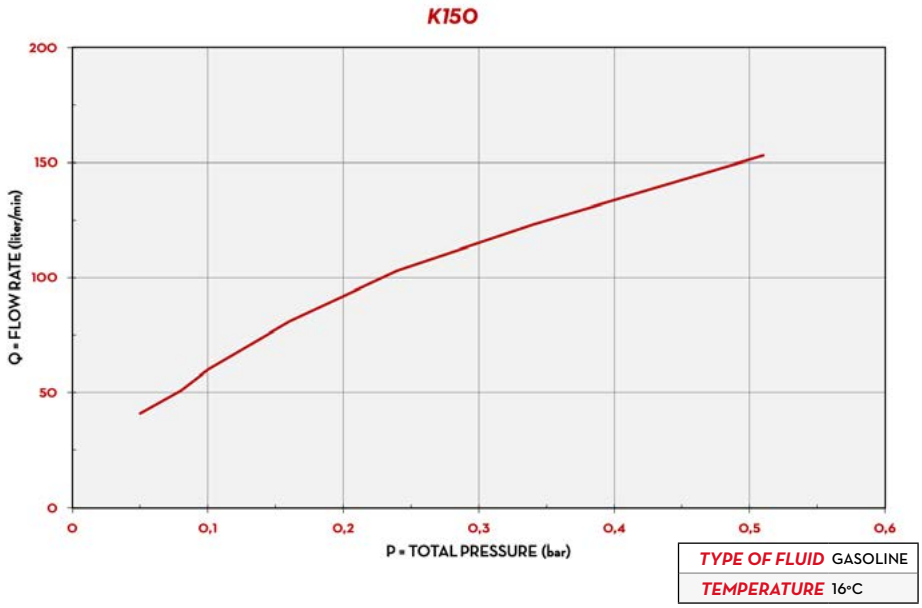

IN THE BOX

- K150 ATEX METER
- INSTRUCTION MANUAL

DETAILS

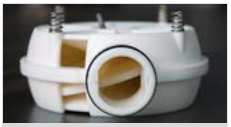
NUTATING DISK

4 FLOW DIRECTIONS

ATEX APPROVED

METALLIC COVER

DIMENSIONS

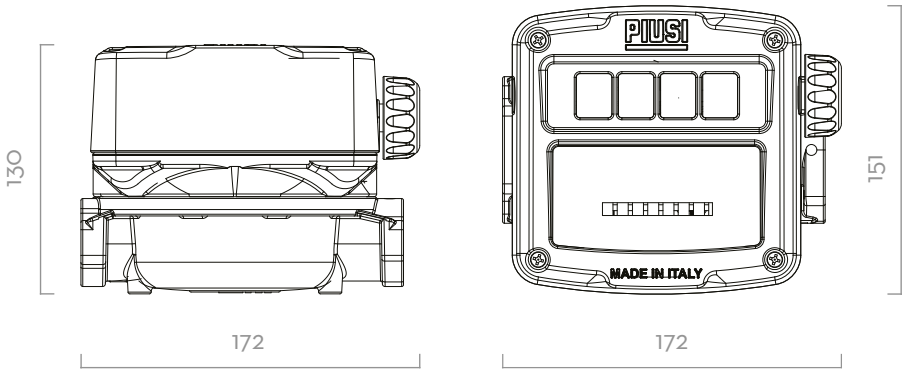

Dimensions expressed in millimeters

MATERIALS

- BODY AND COVER: ALUMINIUM
- NUTATING DISK CHAMBER: TECHNOPOLYMER

TECHNICAL DATA

CODE	DESCRIPTION	FLUIDS TYPE	FLOW RATE		FLOW DIRECTIONS	PRESSURE		INLET/OUTLET
			L/MIN	GPM		BAR	PSI	BSP
F00555A00	(EX) K150 METER VER.A ATEX	D G K	25-150	6,6-40	◄	3,5	50	1" BSP
F00555B00	(EX) K150 METER VER.B ATEX	D G K	25-150	6,6-40	◄	3,5	50	1" BSP
F00555C00	(EX) K150 METER VER.C ATEX	D G K	25-150	6,6-40	◄	3,5	50	1" BSP
F00555D00	(EX) K150 METER VER.D ATEX	D G K	25-150	6,6-40	◄	3,5	50	1" BSP

THE PIUSI K150 IS A MECHANICAL METER EXPRESSLY ENGINEERED FOR HEAVY DUTY AND HIGH FLOW RATE APPLICATIONS. IT IS EASY TO CALIBRATE AND READY-TO-USE; ITS ALUMINIUM COVER AND STURDY BODY MAKE THIS METER SUITABLE FOR A WIDE ARRANGE OF APPLICATIONS WHILE GUARANTEEING THE SAME PRECISION AND QUALITY THAT HAVE ALWAYS BEEN A FEATURE OF PIUSI EQUIPMENT.

K150 ATEX

K24

FEATURES

- BURSTING PRESSURE 100 BAR
- LCD DISPLAY
- FLOW RATE INDICATION
- EASY TO CALIBRATE

The PIUSI K24 is a turbine digital flow meter specifically designed for diesel. Easy to install in-line or at the end of a delivery pipe, it is equipped with a rotatable display. This meter is available both with aluminium or technopolymer body.

BIO diesel · PIUSI · ANY BIODIESEL
STANDARD VERSION (F00408100)
COMPATIBLE WITH ANY BIODIESEL

K24

PERFORMANCE

7-120 L/MIN	20 BAR MAX
FLOW RATE	OPERATING PRESSURE
± 1%	0,2%
ACCURACY	REPEATABILITY

K24 plastic version

K24 PULSER

PACKAGING

CODE	WEIGHT		PACKAGING		
	KG	LBS	MM	INCH	PCS/BOX
K24					
F0040700A	0,5	1,1	BLISTER	BLISTER	1
F00408100	0,5	1,1	BLISTER	BLISTER	1
K24 PULSER					
F0040722A	0,5	1,1	115X160X135	4,5X6,3X5,3	1

ANY BIODIESEL | AIR | ANTIFREEZE | AdBlue® | BIODIESEL | DIESEL | FOOD | GASOLINE | GREASE | KEROSENE | OIL | WATER | WINDSCREEN

CHART

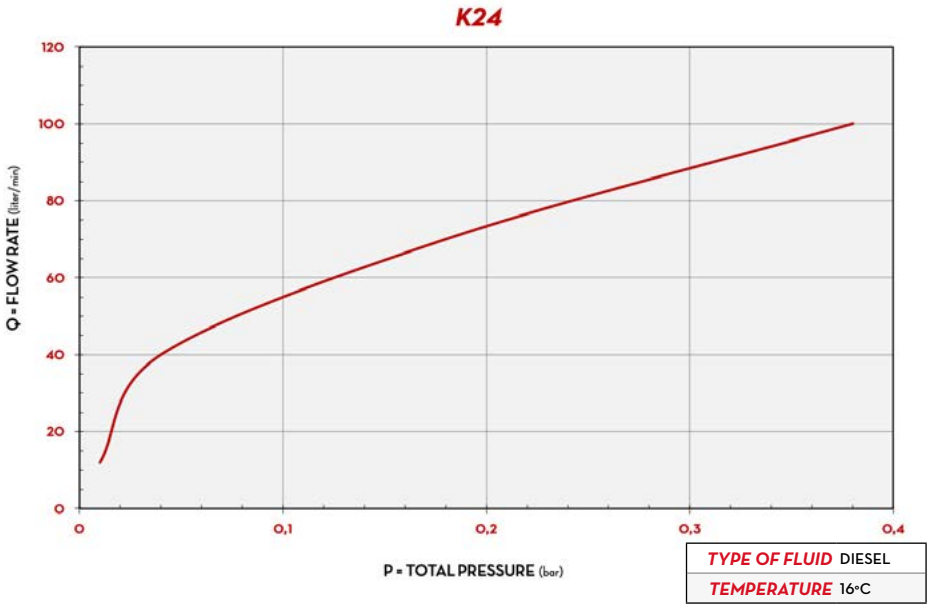

IN THE BOX

- K24 METER
- SOCKET F/F
- INSTRUCTION MANUAL

DETAILS

ROTABLE DISPLAY

BI-DIRECTIONAL

TURBINE PULSE METER

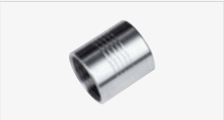
SOCKET F/F

MATERIALS

- BODY: ALUMINIUM
- GEARS: TECHNOPOLYMER

DIMENSIONS

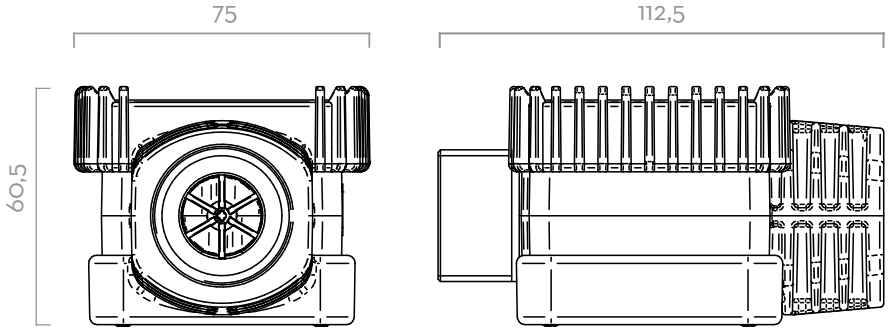

Dimensions expressed in millimeters

TECHNICAL DATA

CODE	DESCRIPTION	FLUIDS TYPE	FLOW RATE		PRESSURE		BATTERY	FLANGE	INLET / OUTLET
			L/MIN	GPM	BAR	PSI	2X AAA BATTERY 1,5V (INCLUDED)		
K24									
F0040700A	K24 METER M/MF LITER BLACK 1INBSP	D	7 - 120	2 - 32	10	150	YES	NO	M 1" BSP - M 1" BSP
F00408100	K24 M/F 1" BSP	D	7 - 120	2 - 32	20	300	YES	NO	M 1" BSP - F 1" BSP
K24 PULSER									
F0040722A	K24 PULSER M/MF LITER BLACK 1INBSP	D	7 - 120	2 - 32	10	150	NO	NO	M 1" BSP - M 1" BSP

UPON REQUEST AVAILABLE IN NPTF VERSION AND DISPLAY IN GALLON/QUARTER OR PRINT
N° 2X1,5V BATTERY INCLUDED

K24

K600/3

FEATURES

- ADJUSTABLE FLANGES
- SUITABLE FOR INDUSTRIAL APPLICATIONS
- IDEAL FOR MOBILE INSTALLATIONS
- LOW ENERGY CONSUMPTIONS

The PIUSI K600/3 is an oval gear meter suitable for monitoring the delivery of diesel, oil and antifreeze. The meter is equipped with an integrated filter and is also available in pulser version.

PERFORMANCE

UP TO 10-100 L/MIN	30 BAR MAX
FLOW RATE	OPERATING PRESSURE
± 0,5%	0,2%
ACCURACY	REPEATABILITY

K600/3 PULSER

K600/3 METER

PACKAGING

CODE	WEIGHT		PACKAGING		
	KG	LBS	MM	INCH	PCS/BOX
METER					
F00496A00	1,6	3,5	200X120X140	7,9X4,7X5,5	1
PULSER					
F00472A00	2,6	5,7	200X120X140	7,9X4,7X5,5	1

CHART

TYPE OF FLUID	DIESEL
TEMPERATURE	16°C

IN THE BOX

- K600/3 METER
- FLANGES
- INSTRUCTION MANUAL

DETAILS

5-DIGIT DISPLAY

OVAL GEARS

DIMENSIONS

Dimensions expressed in millimeters

MATERIALS

- BODY: ALUMINIUM
- GEARS: TECHNOPOLYMER

TECHNICAL DATA

CODE	DESCRIPTION	FLUIDS TYPE	FLOW RATE		PRESSURE		BATTERY	FLANGE	INLET / OUTLET	INLET FILTER
			L/MIN	GPM	BAR	PSI	N°2 X 1,5V (INCLUDED)			
METER										
F00496A00	K600/3 DIESEL	A D O	10 - 100	2,64 - 26,4	30	426	YES	YES	1" BSP	YES
PULSER										
F00472A00	K600/3 1" DIESEL	A D O	10 - 100	2,64 - 26,4	30	426	NO	YES	1" BSP	YES

UPON REQUEST AVAILABLE IN NPTF VERSION AND DISPLAY IN GALLON/QUARTER OR PRINT

K600/3

K600 B/3

FEATURES

- BETTER VISIBILITY
- ADJUSTABLE FLANGES
- ROTATING DISPLAY
- STANDARD BATTERY
- PULSE-OUT VERSION AVAILABLE
- IP66

The PIUSI K600 B/3 is an oval gear meter suitable for monitoring the delivery of diesel, biodiesel and antifreeze. This special version includes a large 80mm built-in digital display that can be rotated to suit every application. Among its features: 5-digit partial total and resettable total. Pulser version available.

PERFORMANCE

UP TO 10-100 L/MIN	30 BAR MAX
FLOW RATE	OPERATING PRESSURE
± 0,5%	0,2%
ACCURACY	REPEATABILITY

K600 B/3 METER

K600 B/3 WITH PULSE-OUT

PACKAGING

CODE	WEIGHT		PACKAGING		
	KG	LBS	MM	INCH	PCS/BOX
METER					
F00491000	2	4,4	200X120X140	7,9X4,7X5,5	1
PULSER					
F00492000	2	4,4	200X120X140	7,9X4,7X5,5	1

CHART

TYPE OF FLUID	DIESEL
TEMPERATURE	16°C

IN THE BOX

- K600 B/3 METER
- FLANGES
- INSTRUCTION MANUAL

DETAILS

5-DIGIT DISPLAY

OVAL GEARS

BIG AND ROTATING DISPLAY

MATERIALS

- BODY: ALUMINIUM
- GEARS: TECHNOPOLYMER

DIMENSIONS

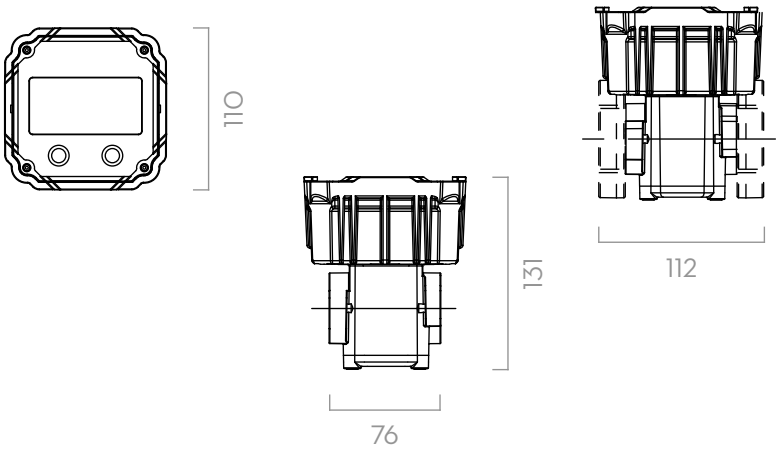

Dimensions expressed in millimeters

TECHNICAL DATA

CODE	DESCRIPTION	FLUIDS TYPE	FLOW RATE		PRESSURE		BATTERY	FLANGE	INLET / OUTLET	INLET FILTER
			L/MIN	GPM	BAR	PSI	N°2 X 1,5V (INCLUDED)			
METER										
F00491000	K600 B/3	D	10 - 100	2,64 - 26,4	30	426	YES	YES	1" BSP	YES
PULSER										
F00492000	K600 B/3 WITH PULSE-OUT	D	10 - 100	2,64 - 26,4	30	426	YES	YES	1" BSP	YES

UPON REQUEST AVAILABLE IN NPTF VERSION AND DISPLAY IN GALLON/QUARTER OR PRINT

K600 B/3

K600/4

FEATURES

- EASY TO INSTALL AND TO CALIBRATE
- VERSATILE
- HIGH PRECISION

The PIUSI K600/4 is an oval gear meter suitable for monitoring the delivery of fuels. This special version is particularly suitable for all applications in the industrial sector.

PERFORMANCE

15-150 L/MIN FLOW RATE	**20 BAR** MAX OPERATING PRESSURE
± 0,5% ACCURACY	**0,2%** REPEATABILITY

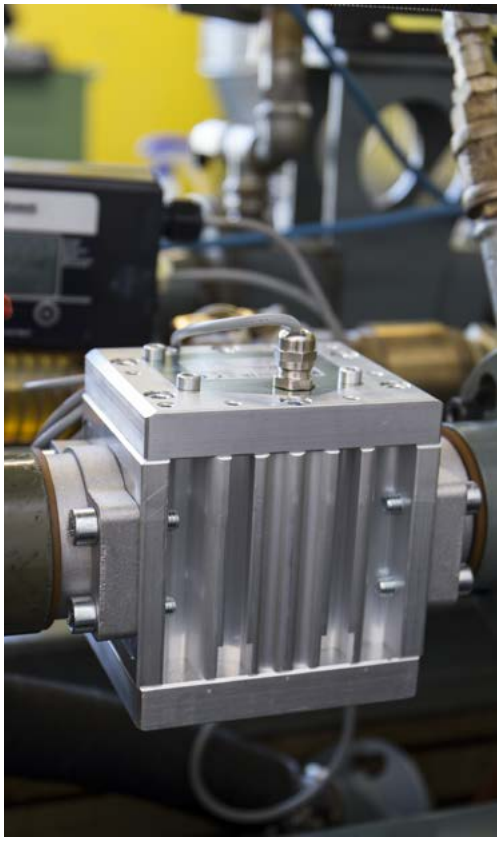

K600/4

K600/4 PULSER

PACKAGING

CODE	WEIGHT		PACKAGING		
	KG	LBS	MM	INCH	PCS/BOX
METER					
00049700A	3,2	7	200X120X140	7,9X4,7X5,5	1
PULSER					
000473000	3,2	7	200X120X140	7,9X4,7X5,5	1

ANY BIODIESEL · AIR · ANTIFREEZE · AdBlue® · BIODIESEL · DIESEL · FOOD · GASOLINE · GREASE · KEROSENE · OIL · WATER · WINDSCREEN

CHART

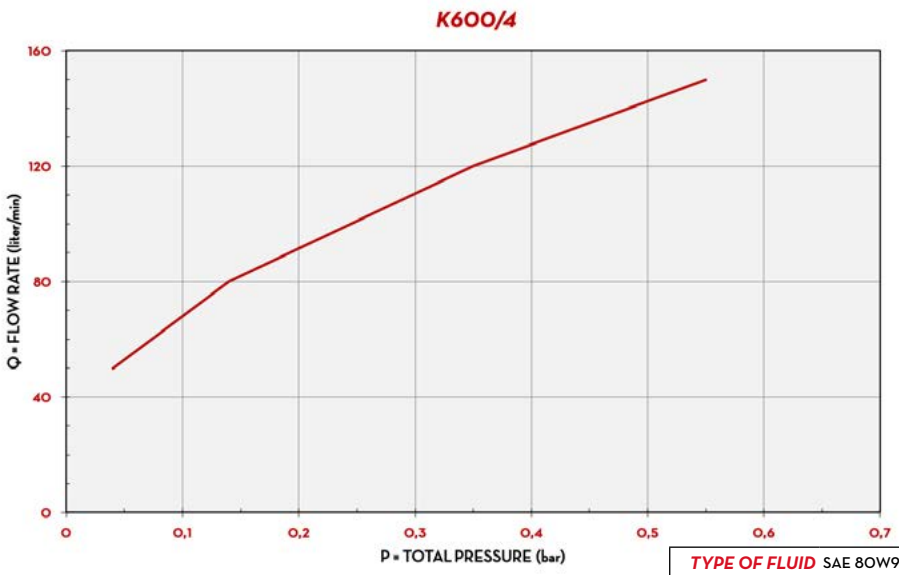

TYPE OF FLUID	SAE 80W90
TEMPERATURE	20°C

IN THE BOX

- K600/4 METER
- FLANGES
- INSTRUCTION MANUAL

DETAILS

5-DIGIT DISPLAY

OVAL GEARS

DIMENSIONS

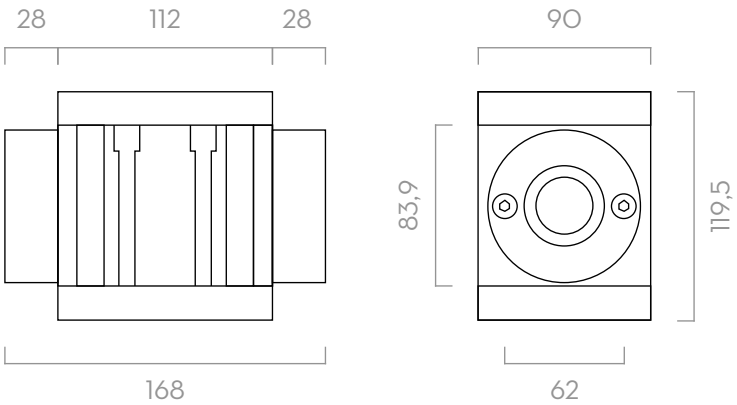

Dimensions expressed in millimeters

MATERIALS

- BODY: ALUMINIUM
- GEARS: TECHNOPOLYMER

TECHNICAL DATA

CODE	DESCRIPTION	FLUIDS TYPE	FLOW RATE		PULSER		PRESSURE		BATTERY	FLANGE	INLET / OUTLET	INLET FILTER
			L/MIN	GPM	P/L	GPM	BAR	PSI	N°2 X 1,5V (INCLUDED)			
METER												
00049700A	K600/4	A B D O	15 - 150	3,9 - 39	-	-	20	284	YES	YES	1 1/2" BSP	YES
PULSER												
000473000	K600/4 PULSER	A B D O	15 - 150	3,9 - 39	26	98	20	300	NO	YES	1 1/2"	YES

UPON REQUEST AVAILABLE IN NPT VERSION.

K700 PULSER

FEATURES

- EASY TO INSTALL AND TO CALIBRATE
- VERSATILE
- HIGH FLOW RATE
- HEAVY DUTY
- INDUSTRIAL APPLICATIONS

The PIUSI K700 PULSER is an oval gear electronic meter with acetal resin gears. This pulse meter easily interfaces with management systems, making it the ideal solution to fit fuel distributors. It is also suitable for tanks and cisterns, loading arms controlling the consumption of fuel in burners or generator sets, besides other applications.

K700 PULSER

PERFORMANCE

25-250 L/MIN FLOW RATE	20 BAR MAX OPERATING PRESSURE
± 0,5% ACCURACY	0,2% REPEATABILITY

PACKAGING

CODE	WEIGHT		PACKAGING		
	KG	LBS	MM	INCH	PCS/BOX
PULSER					
F0049800A	5,5	12	280X160X140	11X6,3X5,5	1

CHART

IN THE BOX

- K700 PULSER METER
- INSTRUCTION MANUAL

DETAILS

INBUILT SUCTION FILTER

OVAL GEARS

DIMENSIONS

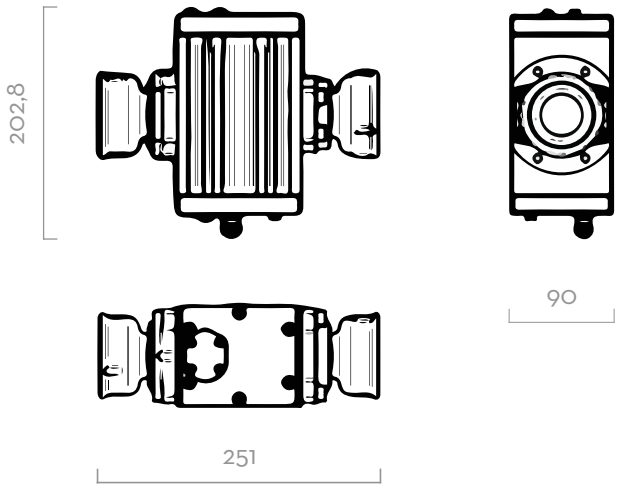

Dimensions expressed in millimeters

MATERIALS

- BODY: ALUMINIUM
- GEARS: TECHNOPOLYMER

TECHNICAL DATA

CODE	DESCRIPTION	FLUIDS TYPE	FLOW RATE		PULSER		PRESSURE		BATTERY	FLANGE	INLET / OUTLET	INLET FILTER
			L/MIN	GPM	P/L	GPM	BAR	PSI	N°2 X 1,5V (INCLUDED)			
PULSER												
F0049800A	K700 PULSER	A B D O	25 - 250	6,6 - 66	14	53	20	300	NO	YES	2" BSP	YES

UPON REQUEST AVAILABLE IN NPT VERSION.

K700 PULSER

K900

FEATURES

- STURDY STRUCTURE
- HEAVY DUTY CONDITIONS
- HIGH FLOW RATE APPLICATIONS
- READY TO INSTALL

Among the electronic flow meters Made in Italy by PIUSI, the K900 is the oval gear measuring equipment suitable for controlling the non commercial dispensing of low, medium and high viscosity fluids compatible with its construction materials. This meter is equipped with an in-built suction filter, 3" inlet/outlet and free contact signal pulser.

PERFORMANCE

50-500 L/MIN	20 BAR MAX
FLOW RATE	OPERATING PRESSURE
±0,5%	0,2%
ACCURACY	REPEATABILITY

K900

PACKAGING

CODE	WEIGHT		PACKAGING		
	KG	LBS	MM	INCH	PCS/BOX
METER					
F0049900B	12	26,5	400X290X200	15,7X11,4X7,9	1
PULSER					
F0049902B	12	26,5	400X290X200	15,7X11,4X7,9	1

ANY BIODIESEL | AIR | ANTIFREEZE | AdBlue® | BIODIESEL | DIESEL | FOOD | GASOLINE | GREASE | KEROSENE | OIL | WATER | WINDSCREEN

CHART

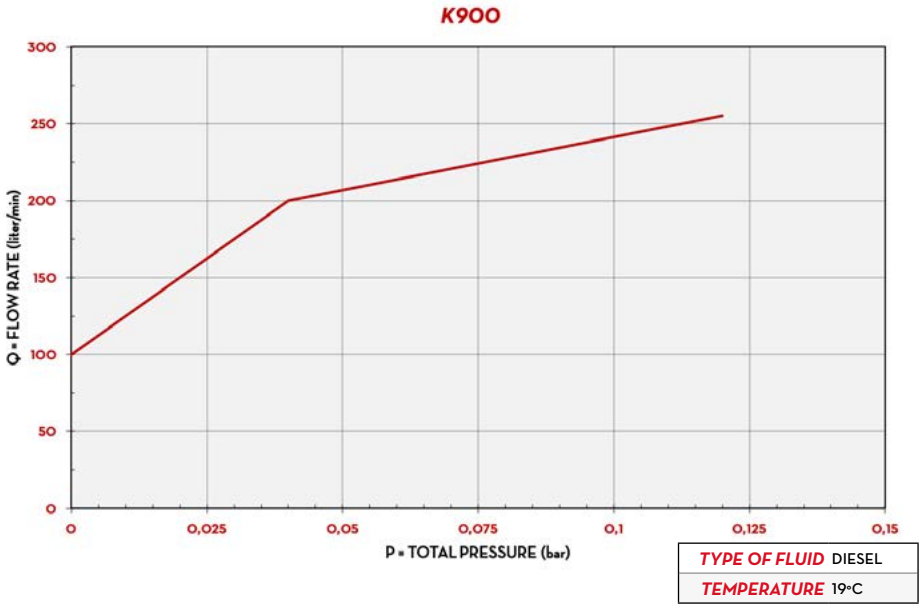

IN THE BOX

- K900 METER
- INSTRUCTION MANUAL

DETAILS

INBUILT FILTER

OVAL GEARS

5 DIGIT PARTIAL TOTAL

IN/OUT 3"

MATERIALS

- BODY: ALUMINIUM
- GEARS: TECHNOPOLYMER

DIMENSIONS

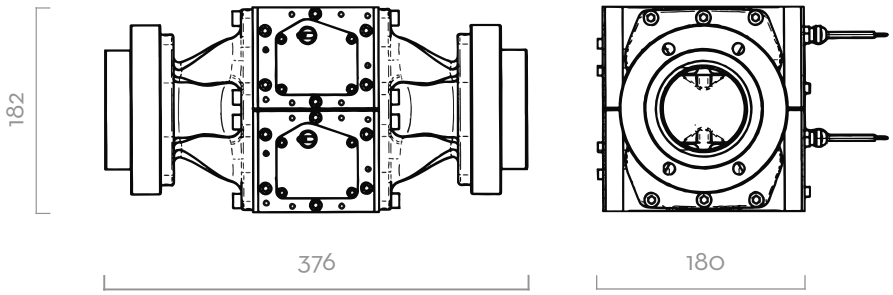

Dimensions expressed in millimeters

TECHNICAL DATA

CODE	DESCRIPTION	FLUIDS TYPE	FLOW RATE		PULSER		PRESSURE		BATTERY	FLANGE	INLET / OUTLET	INLET FILTER
			L/MIN	GPM	P/L	GPM	BAR	PSI	N°2 X 1,5V (INCLUDED)			
METER												
F0049900B	K900	B D	50 - 500	13,2 - 132	-	-	20	284	YES	YES	3" BSP	YES
PULSER												
F0049902B	K900 PULSER	B D	50 - 500	13,2 - 132	10	38	20	284	YES	YES	3" BSP	YES

UPON REQUEST AVAILABLE IN NPT VERSION. DISPLAY POWER SUPPLY 4-12VDC, 1.2 AMP. TYPE OF OUTPUT SIGNAL: OPEN COLLECTOR MAX 50V, 1.2 AMP, SINGLE CHANNEL.

K900

REMOTE DISPLAY

FEATURES

- *LARGE SCREEN DISPLAY*
- *NON RESETTABLE TOTAL*
- *STANDARD BATTERY*

REMOTE DISPLAY for remote control (via max. 15 m. cable) of pulse meters. The large screen displays the quantity delivered and the non resettable total Equipped with software applications for calibrating meters. Available as both basic display device and as pulse emitter. Indispensable for receivers designed to recognise only discreet quantities of impulses. The easy interfacing management systems of the pulse transmitter models extend the field of application of pulse meters combined with remote displays.

PERFORMANCE

every	UP TO
PULSE METER	100 PULSES/LITER
COMPATIBILITY	FLOW RATE

REMOTE DISPLAY

PACKAGING

CODE	WEIGHT		PACKAGING		
	KG	LBS	MM	INCH	PCS/BOX
F1175200B	1,2	2,6	200X120X140	7,9X4,7X5,5	1
F1175300B	1,2	2,6	200X120X140	8,9X4,9X5,9	1
F1175400B	1,2	2,6	200X120X140	8,9X4,9X5,9	1
F0049501A	1,2	2,6	200X120X140	8,9X4,9X5,9	1
F0049502A	1,2	2,6	200X120X140	8,9X4,9X5,9	1
F0049503B	1,2	2,6	225X125X150	8,9X4,9X5,9	1

ANY BIODIESEL · AIR · ANTIFREEZE · AdBlue® · BIODIESEL · DIESEL · FOOD · GASOLINE · GREASE · KEROSENE · OIL · WATER · WINDSCREEN

CHART

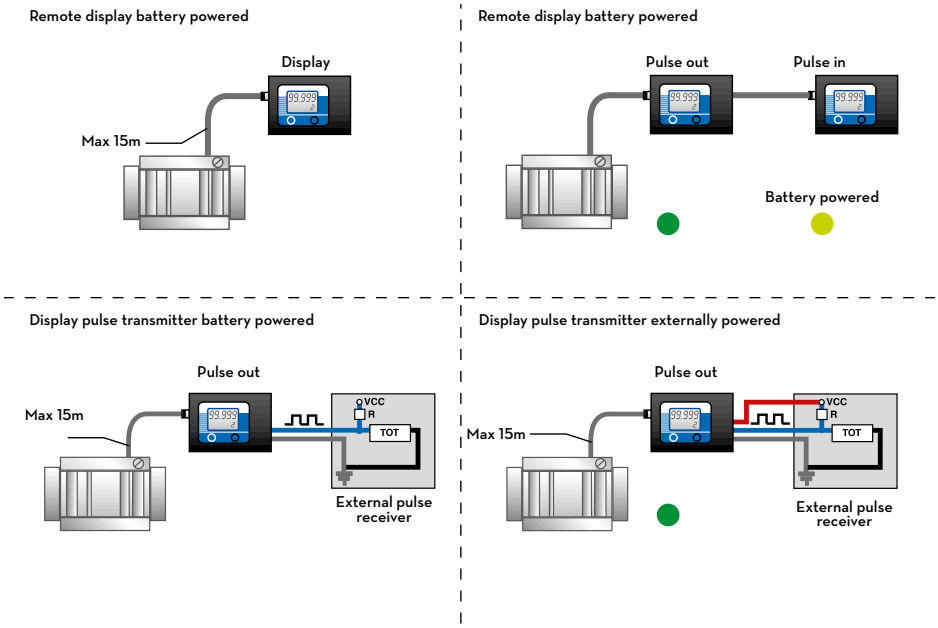

IN THE BOX

- REMOTE DISPLAY UNIT
- BRACKET
- INSTRUCTION MANUAL

DETAILS

5 DIGITS PARTIAL TOTAL

ADJUSTABLE BRACKET

DIMENSIONS

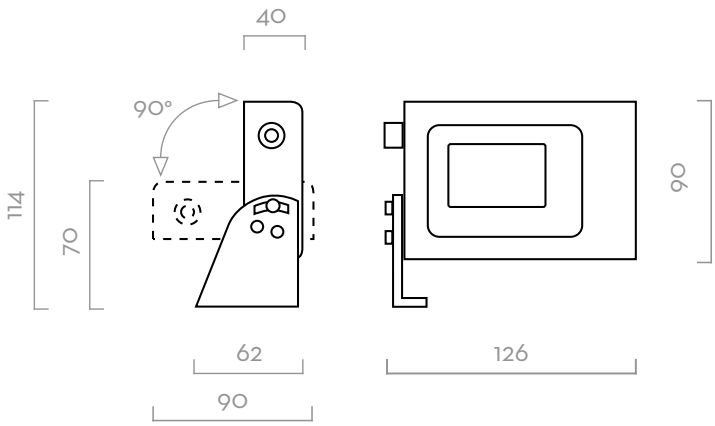

Dimensions expressed in millimeters

TECHNICAL DATA

CODE	DESCRIPTION	FLUIDS TYPE	FLANGE	INLET OUTLET
F1175200B	REMOTE DISPLAY PULSE OUT K600	Ad B D O W W	K600 DIESEL	PULSE OUT
F1175300B	REMOTE DISPLAY PULSE OUT K600/4	Ad B D O W W	K600/4	PULSE OUT
F1175400B	REMOTE DISPLAY PULSE OUT K700	Ad B D O W W	K700	PULSE OUT
F0049501A	REMOTE DISPLAY PULSE OUT UNIVERSAL	Ad B D O W W	K200, K400, K600 OIL, K600 DIESEL, K600/4, K700	PULSE OUT
F0049502A	UNIVERSAL REMOTE DISPLAY PULSE IN	Ad B D O W W	FOR ALL PIUSI PULSE OUT REMOTE DISPLAY	PULSE IN
F0049503B	REMOTE DISPLAY PULSE OUT 100 ADBLUE	Ad B D O W W	TURBINOX / K24 PULSER	PULSE OUT

REMOTE DISPLAY

K33 / K44

FEATURES

- READY TO USE
- BURSTING PRESSURE 28 BAR
- NO BATTERY NEEDED
- EASY TO INSTALL AND CALIBRATE
- 4 FLOW DIRECTION

The PIUSI K33 and K44 are the bestseller mechanical meters in this market. Reliable, easy to install and to calibrate, they are equipped with a nutating disk that allows them to be installed in all four flow directions. The display is available in both three or four digits, according to the model chosen.

K33

K44

K33 BIO

PERFORMANCE

20-120 L/MIN FLOW RATE	10 BAR MAX OPERATING PRESSURE
±1% ACCURACY	±0,3% REPEATIBILITY

PACKAGING

CODICE	PESO		PACKAGING			N. BOX / EUROPALLET	
	KG	LBS	MM	INCH	PCS/BOX	✈	🚢
ZÄHLER							
000550000	2,06	4,55	180X180X170	-	1	192	240
000551000	2,06	4,55	180X180X170	-	1	192	240
000552000	2,06	4,55	180X180X170	-	1	192	240
000553000	2,06	4,55	180X180X170	-	1	192	240
000560000	2,08	4,58	180X180X170	-	1	192	240
000561000	2,08	4,58	180X180X170	-	1	192	240
000562000	2,08	4,58	180X180X170	-	1	192	240
000563000	2,08	4,58	180X180X170	-	1	192	240
F00550B00	2,06	4,55	180X180X170	-	1	192	240
PULSER							
00056500A	2,14	4,73	180X180X170	-	1	192	240

ANY BIODIESEL | AIR | ANTIFREEZE | AdBlue® | BIODIESEL | DIESEL | FOOD | GASOLINE | GREASE | KEROSENE | OIL | WATER | WINDSCREEN

CHART

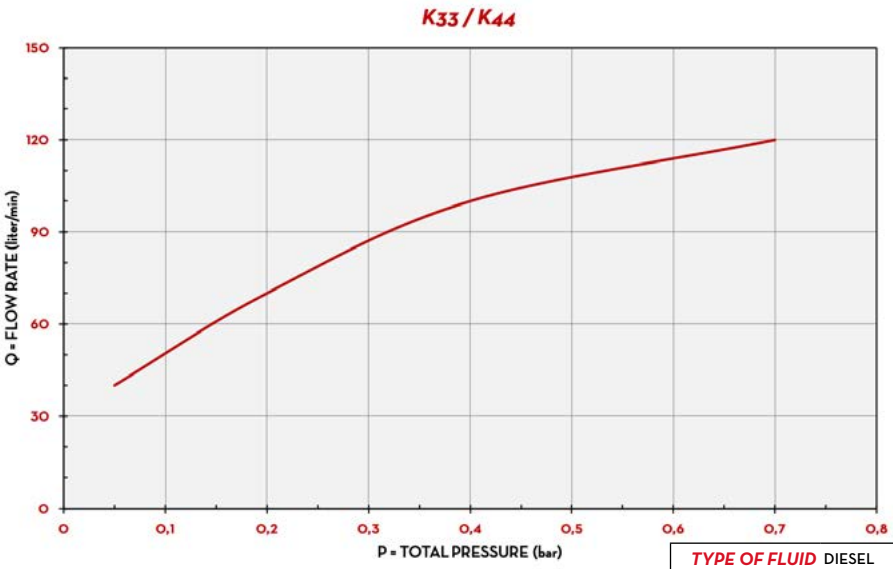

TYPE OF FLUID	DIESEL
TEMPERATURE	16°C

IN THE BOX

- K33 / K44 METER
- INSTRUCTION MANUAL

DETAILS

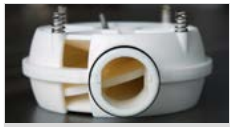

NUTATING DISK SYSTEM

4 FLOW DIRECTIONS

DIMENSIONS

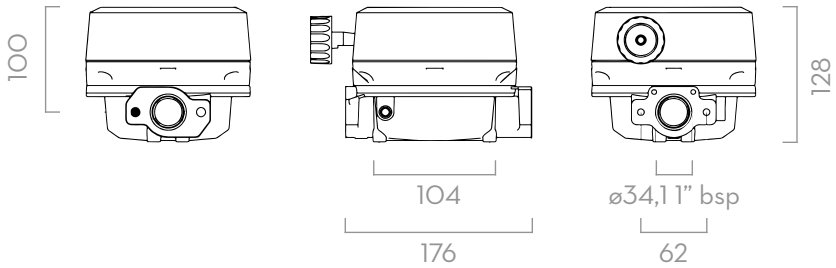

Dimensions expressed in millimeters

MATERIALS

- BODY: ALUMINIUM
- NUTATING DISK CHAMBER: TECHNOPOLYMER

TECHNICAL DATA

CODE	DESCRIPTION	FLUIDS TYPE	FLOW DIRECTION	FLOW RATE L/MIN	FLOW RATE GPM	PRESSURE BAR	PRESSURE PSI	PULSER P/L (P/GAL)	INLET / OUTLET
ZÄHLER									
000550000	K33 VER. A	D	←	20 - 120	5 - 32	10	142	-	1" BSP
000551000	K33 VER. B	D	↑	20 - 120	5 - 32	10	142	-	1" BSP
000552000	K33 VER. C	D	↓	20 - 120	5 - 32	10	142	-	1" BSP
000553000	K33 VER. D	D	→	20 - 120	5 - 32	10	142	-	1" BSP
000560000	K44 VER. A	D	←	20 - 120	5 - 32	10	142	-	1" BSP
000561000	K44 VER. B	D	↑	20 - 120	5 - 32	10	142	-	1" BSP
000562000	K44 VER. C	D	↓	20 - 120	5 - 32	10	142	-	1" BSP
000563000	K44 VER. D	D	→	20 - 120	5 - 32	10	142	-	1" BSP
F00550B00	K33 1" BSP VER.A B100	BIO D	←	20 - 120	5 - 32	10	142	-	1" BSP
PULSER									
00056500A	K44 PULSER	D	→	20 - 120	5 - 32	10	142	10 (38)	1" BSP

K33 / K44

K150

FEATURES

- HEAVY DUTY CONDITIONS
- HIGH FLOW RATE
- BURSTING PRESSURE 28 BAR
- EASY READING
- 4 FLOW DIRECTIONS

K150 is expressly engineered to meet the market requirements of a meter suitable for flow rates superior than 120 l/min and that can be used both for fluids such as diesel and biodiesel, as well as in potentially explosives atmosphere; with gasoline for example. K150 is easy to calibrate and ready to use; its aluminium cover and sturdy body make this meter suitable for a wide arrange of application while guaranteeing the same precision and quality that have always featured PIUSI equipment. The mechanical display allows to read quickly the quantity dispensed. It can be installed everywhere thanks to the (optional) 1,5" flange kit.

PERFORMANCE

UP TO 25-150 L/MIN FLOW RATE	3,5 BAR MAX OPERATING PRESSURE
± 1% ACCURACY	0,3% REPEATABILITY

K150

K150 BIO

BIO diesel VERSION AVAILABLE

PACKAGING

CODE	WEIGHT		PACKAGING			BOXES/EUROPALLET	
	KG	LBS	MM	INCH	PCS/BOX	✈	🚚
FO0554A00	2,38	5,25	185X185X170	7,28X7,28X6,69	1	192	240
FO0554B00	2,38	5,25	185X185X170	7,28X7,28X6,69	1	192	240
FO0554C00	2,38	5,25	185X185X170	7,28X7,28X6,69	1	192	240
FO0554D00	2,38	5,25	185X185X170	7,28X7,28X6,69	1	192	240
FO0554B10	2,38	5,25	185X185X170	7,28X7,28X6,69	1	192	240

ANY BIODIESEL | AIR | ANTIFREEZE | AdBlue® | BIODIESEL | DIESEL | FOOD | GASOLINE | GREASE | KEROSENE | OIL | WATER | WINDSCREEN

CHART

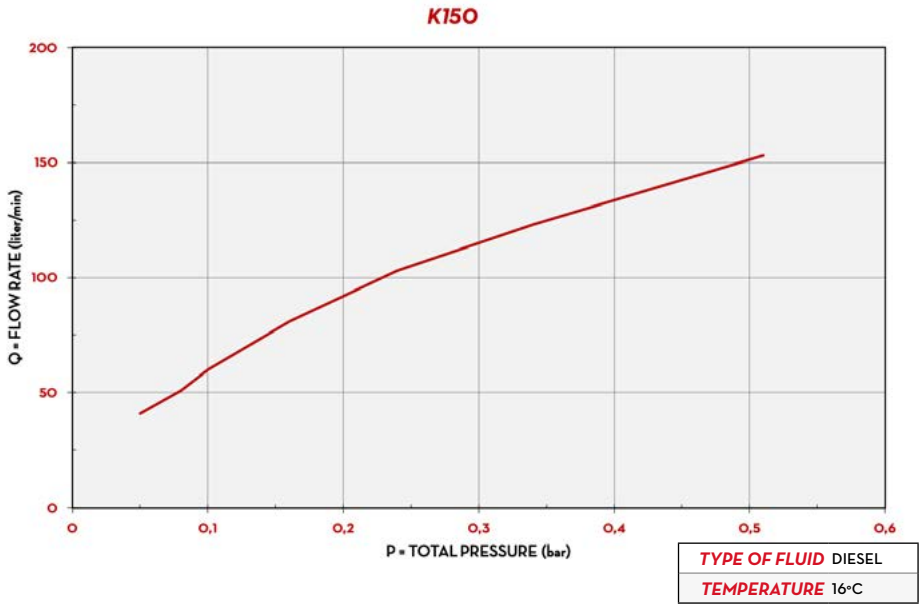

IN THE BOX

- K150 METER
- INSTRUCTION MANUAL

DETAILS

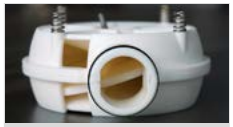
NUTATING DISK

4 FLOW DIRECTIONS

METALLIC COVER

DIMENSIONS

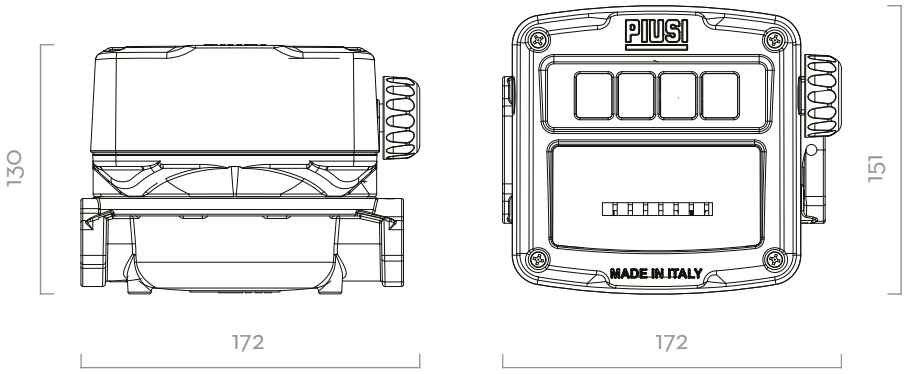

Dimensions expressed in millimeters

MATERIALS

- BODY AND COVER: ALUMINIUM
- NUTATING DISK CHAMBER: TECHNOPOLYMER

TECHNICAL DATA

CODE	DESCRIPTION	FLUIDS TYPE	FLOW RATE		FLOW DIRECTIONS	PRESSURE		INLET/OUTLET
			L/MIN	GPM		BAR	PSI	BSP
F00554A00	K150 METER LITERS - 1" BSP VER.A	D	25-150	6,6-40	◄	3,5	50	1" BSP
F00554B00	K150 METER LITERS - 1" BSP VER.B	D	25-150	6,6-40	◄	3,5	50	1" BSP
F00554C00	K150 METER LITERS - 1" BSP VER.C	D	25-150	6,6-40	◄	3,5	50	1" BSP
F00554D00	K150 METER LITERS - 1" BSP VER.D	D	25-150	6,6-40	◄	3,5	50	1" BSP
F00554B10	K150 - 1" BSP VER.A B100	BIO D	25-150	6,6-40	◄	3,5	50	1" BSP

THE PIUSI K150 IS A MECHANICAL METER EXPRESSLY ENGINEERED FOR HEAVY DUTY AND HIGH FLOW RATE APPLICATIONS. IT IS EASY TO CALIBRATE AND READY-TO-USE; ITS ALUMINIUM COVER AND STURDY BODY MAKE THIS METER SUITABLE FOR A WIDE ARRANGE OF APPLICATIONS WHILE GUARANTEEING THE SAME PRECISION AND QUALITY THAT HAVE ALWAYS BEEN A FEATURE OF PIUSI EQUIPMENT.

K700

FEATURES

- HEAVY DUTY CONDITIONS
- STURDY STRUCTURE
- BUSRSTING PRESSURE 30 BAR
- NO BATTERY NEEDED
- EASY TO INSTALL
- 2 FLOW DIRECTION

Medium-high flow rates require specific measuring equipment able to adapt precisely to the flow: It is the case of the oval gear mechanical flow meter PIUSI K700: a sturdy, reliable and easy to install equipment suitable for the most demanding environments. The meter displays 4-digit piece of equipment partial total that can show up to a maximum of 9999 liters.

PERFORMANCE

40-220 L/MIN FLOW RATE	10 BAR MAX OPERATING PRESSURE
± 1,5% ACCURACY	0,3% REPEATABILITY

K700

PACKAGING

CODE	WEIGHT		PACKAGING			N. BOXES / EUROPALLET	
	KG	LBS	MM	INCH	PCS/BOX	✈	🚢
F00540000	5,8	12,8	240X240X275	-	1	48	72
F00540020	5,8	12,8	240X240X275	-	1	48	72
F00540030	5,8	12,8	240X240X275	-	1	48	72
F00540040	5,8	12,8	240X240X275	-	1	48	72

ANY BIODIESEL | AIR | ANTIFREEZE | AdBlue® | BIODIESEL | DIESEL | FOOD | GASOLINE | GREASE | KEROSENE | OIL | WATER | WINDSCREEN

CHART

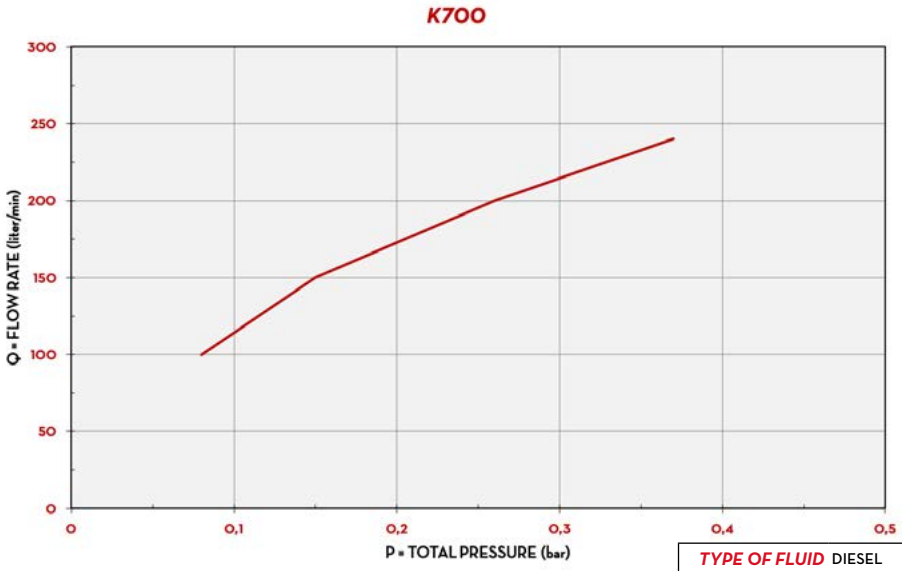

TYPE OF FLUID	DIESEL
TEMPERATURE	8°C

IN THE BOX

- K700 METER
- INSTRUCTION MANUAL

DETAILS

4-DIGITS

OVAL GEARS

4 FLOW DIRECTIONS

DIMENSIONS

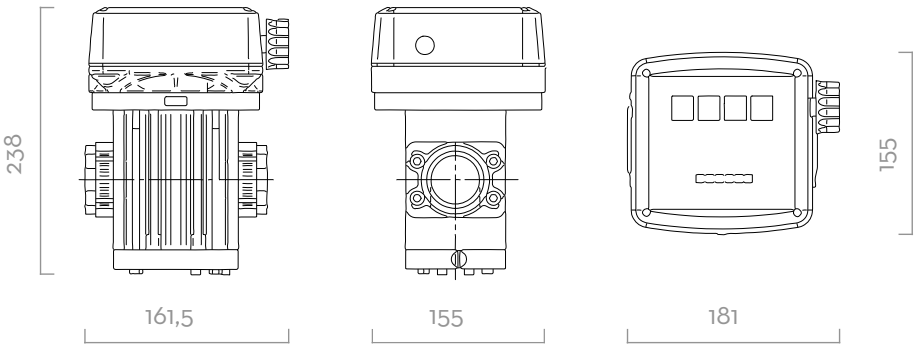

Dimensions expressed in millimeters

MATERIALS

- BODY: ALUMINIUM
- GEARS: TECHNOPOLYMER

TECHNICAL DATA

CODE	DESCRIPTION	FLUIDS TYPE	FLOW DIRECTION	FLOW RATE		PRESSURE		INLET FILTER	INLET / OUTLET
				L/MIN	GPM	BAR	PSI		
F00540000	K700 VER. A	D	◄	40 - 220	5 - 53	10	142	YES	1" 1/2 BSP
F00540020	K700 VER. B	D	◄	40 - 220	5 - 32	10	142	YES	1" 1/2 BSP
F00540030	K700 VER. C	D	◄	40 - 220	5 - 53	10	142	YES	1" 1/2 BSP
F00540040	K700 VER. D	D	◄	40 - 220	5 - 32	10	142	YES	1" 1/2 BSP

METERS ACCESSORIES

ELECTRONIC METERS

K24	CODICE	DESCRIZIONE
	F0049501A	REMOTE DISPLAY PULS OUT UNIVERSAL
	F0049502A	UNIVERSAL REMOTE DISPLAY PULS IN

F0049501A
F0049502A

K600/3 PULSER	CODICE	DESCRIZIONE
	F0049501A	DISPLAY REMOTO PULS OUT UNIVERSALE
	F0049502A	DISPLAY REMOTO PULS IN UNIVERSALE

F0049501A
F0049502A

K600/3 METER	CODICE	DESCRIZIONE
	F1175200B	REMOTE DISPLAY PULS OUT K600/3 LT SEL

F1175200B

K600/4	CODICE	DESCRIZIONE
	F0049501A	REMOTE DISPLAY PULS OUT UNIVERSAL
	F0049502A	UNIVERSAL REMOTE DISPLAY PULS IN
	F1175300B	REMOTE DISPLAY PULS OUT K600/4 LT SEL

F0049501A
F0049502A
F1175300B

K700	CODICE	DESCRIZIONE
	F0049501A	REMOTE DISPLAY PULS OUT UNIVERSAL
	F0049502A	UNIVERSAL REMOTE DISPLAY PULS IN
	F1175400B	REMOTE DISPLAY PULS OUT K700 LT SEL

F0049501A
F0049502A
F1175400B

K900	CODICE	DESCRIZIONE
	R1152600A	KIT DR K900 W PULS OUT
	R1146400A	KIT DR K900 W/O PULS OUT

R1152600A
R1146400A

ATTENTION
TRAILER SERVICE CHECKLIST
VISUAL INSPECTION
U BOLTS & WHEEL NUTS TO BE TORQUED
PIUSI

NOZZLES

A60 / A140 ATEX

FEATURES

- AUTOMATIC
- READY TO USE
- STURDY DESIGN

Expressly engineered to meet the strictest requirements of the ATEX/IECEx regulations, the PIUSI A60/A140 ATEX is an automatic nozzle suitable to dispense fluids - such as gasoline, kerosene, diesel and others - in potentially explosive atmospheres. It is fitted with a structural component that automatically stops dispensing when the tank is full.

Atex
II 2 G

A60 ATEX

Atex
II 2 G

A140 ATEX

PERFORMANCE

UP TO 140 L/MIN	1" BSP
FLOW RATE	INLET
A60 ø21MM	A140 ø29MM
SPOUT	SPOUT

PACKAGING

CODE		WEIGHT		PACKAGING			BOXES/EUROPALLET	
WITHOUT SWIVEL	WITH SWIVEL	KG	LBS	MM	INCH	PCS/BOX	✈	🚢
A60 ATEX								
-	F00613020	1,25	2,76	460X200X80	181X78X31	1	-	-
A140 ATEX								
F22675000	-	2,00	4,41	460X200X80	181X78X31	1	-	-

ANY BIODIESEL | AIR | ANTIFREEZE | AdBlue® | BIODIESEL | DIESEL | FOOD | GASOLINE | GREASE | KEROSENE | OIL | WATER | WINDSCREEN

CHART

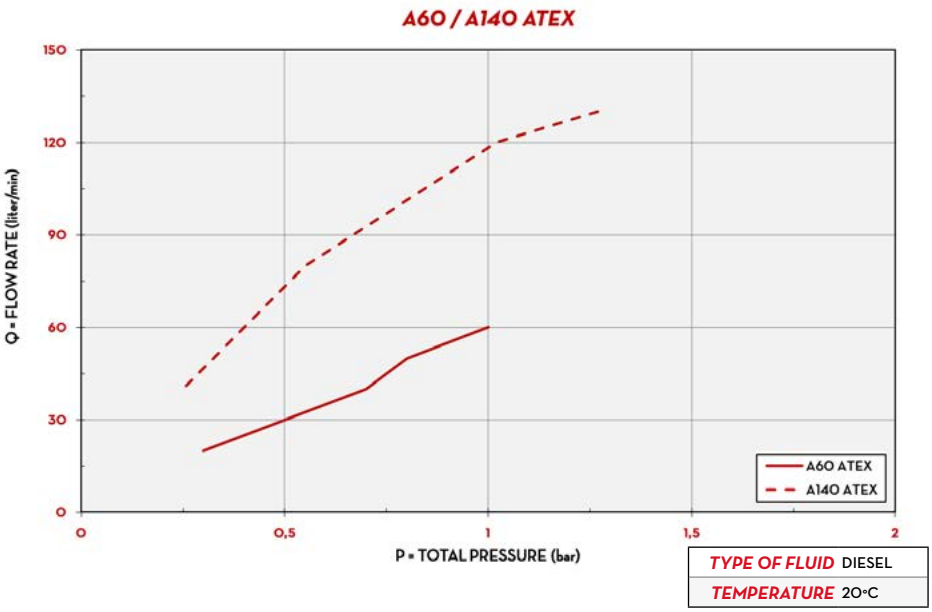

IN THE BOX

- A60 / A140 ATEX NOZZLE
- INSTRUCTION MANUAL

DETAILS

AUTOMATIC STOP

F 1" SWIVEL

DIMENSIONS

A60 ATEX

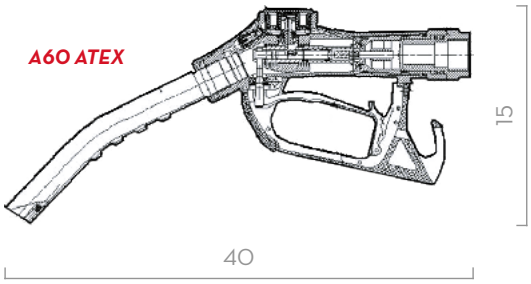

A140 ATEX

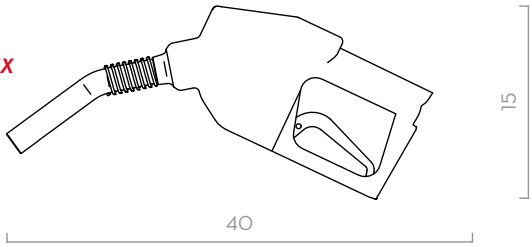

Dimensions expressed in millimeters

MATERIALS

- BODY: ALUMINIUM
- SEAL: NBR

TECHNICAL DATA

CODE		DESCRIPTION	FLUIDS TYPE	FLOW RATE		INLET		SPOUT
WITHOUT SWIVEL	WITH SWIVEL			L/MIN	GPM	WITHOUT SWIVEL BSP	WITH SWIVEL BSP	EXT. Ø MM
A60 ATEX								
-	F00613020	A60 ATEX	D G K	60	16	-	F1"	21
A140 ATEX								
F22675000	-	(EX) AUTOMATIC NOZZLE A140 W\OUT SWIVEL	D G K	140	37	F1"	-	28,7

A60 / A140 ATEX

A60 / A80 / A120 / A140

FEATURES

- AUTOMATIC
- READY TO USE
- STURDY DESIGN

Among the range of nozzles for fuel dispensing, PIUSI A60/A80/A120/A140 consist of a range of automatic devices for flow rates up to 140 l/min fitted with an inner device that automatically stops the fluid dispensing when the tank is full. These nozzles also include a swivel connector.

PERFORMANCE

UP TO 140 L/MIN	1" BSP
FLOW RATE	INLET
A60 24MM	A80/A120/A140 29MM
SPOUT	SPOUT

PACKAGING

CODE		WEIGHT		PACKAGING			BOXES/EUROPALLET	
WITHOUT SWIVEL	WITH SWIVEL	KG	LBS	MM	INCH	PCS/BOX	✈	
A60								
-	F00603060	1,25	2,76	360X360X280	14X14X11	1	-	-
-	F00602020	1,20	2,65	360X360X280	14X14X11	1	-	-
-	F00613A00	1,30	2,87	360X360X280	14X14X11	1	-	-
-	F00870010	1,70	3,74	360X360X280	14X14X11	1	-	-
A80								
-	F00604030	1,93	4,25	360X360X280	14X14X11	1	-	-
A120								
-	F00610020	1,93	4,25	360X360X280	14X14X11	1	-	-
-	F00614A00	1,65	3,64	360X360X280	14X14X11	1	-	-
-	F00610B00	1,93	4,25	360X360X280	14X14X11	1	-	-
A140								
F00610200	-	2,00	4,41	460X200X80	181X78X31	1	-	-
A70								
-	F00603B00	1,25	2,76	360X360X280	14X14X11	1	-	-

ANY BIODIESEL | AIR | ANTIFREEZE | AdBlue® | BIODIESEL | DIESEL | FOOD | GASOLINE | GREASE | KEROSENE | OIL | WATER | WINDSCREEN

CHART

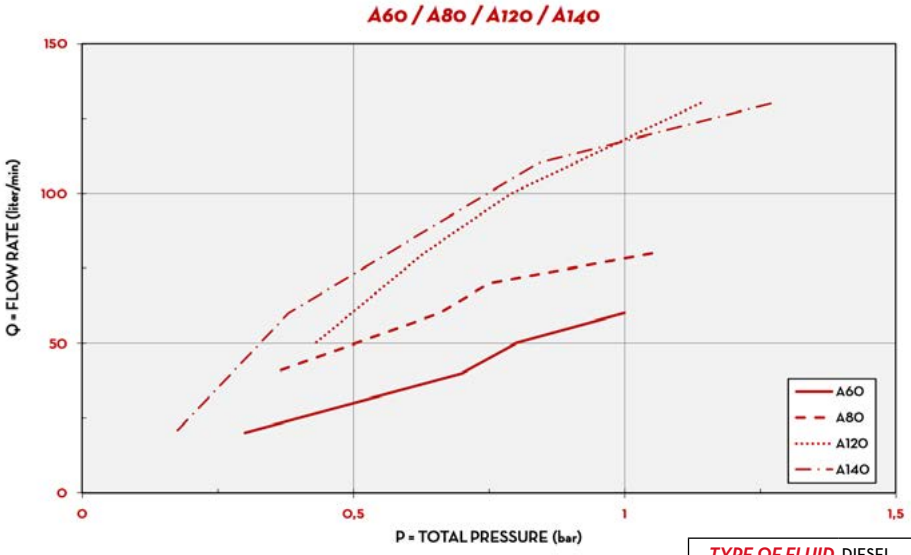

TYPE OF FLUID	DIESEL
TEMPERATURE	10/20 °C

IN THE BOX

- A60/A80/A120/A140 NOZZLE
- INSTRUCTION MANUAL

DETAILS

AUTOMATIC STOP

F 1" SWIVEL

DIMENSIONS

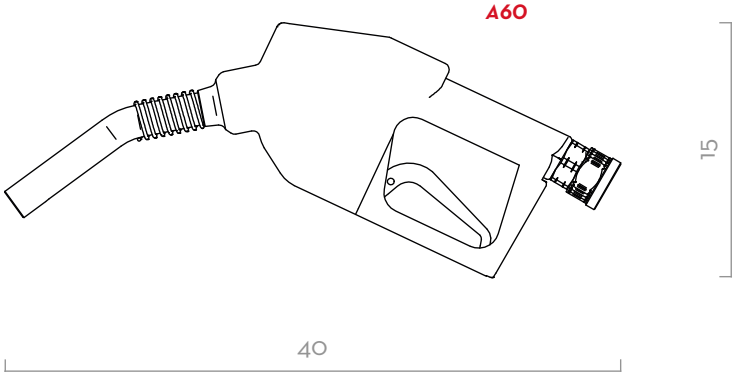

Dimensions expressed in millimeters

MATERIALS

- BODY: ALUMINIUM
- SEAL: VITON

TECHNICAL DATA

CODE		DESCRIPTION	FLUIDS TYPE	FLOW RATE		INLET		SPOUT
WITHOUT SWIVEL	WITH SWIVEL			L/MIN	GPM	WITHOUT SWIVEL BSP	WITH SWIVEL BSP	EXT. Ø MM
A60								
-	F00603060	ZAPFVENTIL AUTOM. A60 W/SWIVEL 3/4" BSP	D G	60	16	F3/4"	F1"	24
-	F00602020	AUTO. NOZZLE A60 W/SWIVEL 3/4" UNLEADED	D G	60	16	F3/4"	F1"	20
-	F00613A00	AUTO. NOZZLE A60 EN 13012 W/SWIVEL 3/4"	D	70	19	F3/4"	F1"	24
-	F00870010	ZAPFVENTIL AUTOM. A60 W/K24 METER BLACK	D	70	19	-	F1"	24
A80								
-	F00604030	ZAPFVENTIL AUTOM. A80 W/SWIVEL 1" BSP	D G	90	24	-	F1"	29
A120								
-	F00610020	ZAPFVENTIL AUTOM. A120 W/SWIVEL 1" BSP	D G	120	32	-	F1"	29
-	F00614A00	AUTO NOZZLE A120 EN 13012 W/SWIVEL 1"	D	120	32	-	F1"	29
-	F00610B00	AUTOMATIC NOZZLE A120 W/SWIV. 1"BSP B100	BIO D	120	32	-	F1"	29
A140								
-	F00610200	ZAPFVENTIL AUTOM. A140 W/SWIVEL 1" BSP	D	140	37	-	F1"	29
A70								
-	F00603B00	AUTOMATIC NOZZLE A70 1" BSP B100	BIO D	70	19	-	F1"	24

A60 / A80 / A120 / A140

A280

FEATURES

- AUTOMATIC
- READY TO USE
- HEAVY DUTY CONDITIONS
- STURDY STRUCTURE

The PIUSI A280 is the biggest nozzle among the PIUSI range of automatic fuel nozzles with its flow rate up to 280 l/min and spout OD 38,5 mm.
Fully automatic thanks to the structural device that stops dispensing when the tank is full; it comes with a built-in swivel to guarantee maximum versatility.

A280

PERFORMANCE

UP TO 280 L/MIN	1" 1/2 BSP
FLOW RATE	INLET

38,5MM OD SPOUT
A280

PACKAGING

CODE	WEIGHT		PACKAGING			N. BOXES / EUROPALLET	
	KG	LBS	MM	INCH	PCS/BOX	✈	🚢
F13249000	3,30	7,28	-	-	1	-	-

CHART

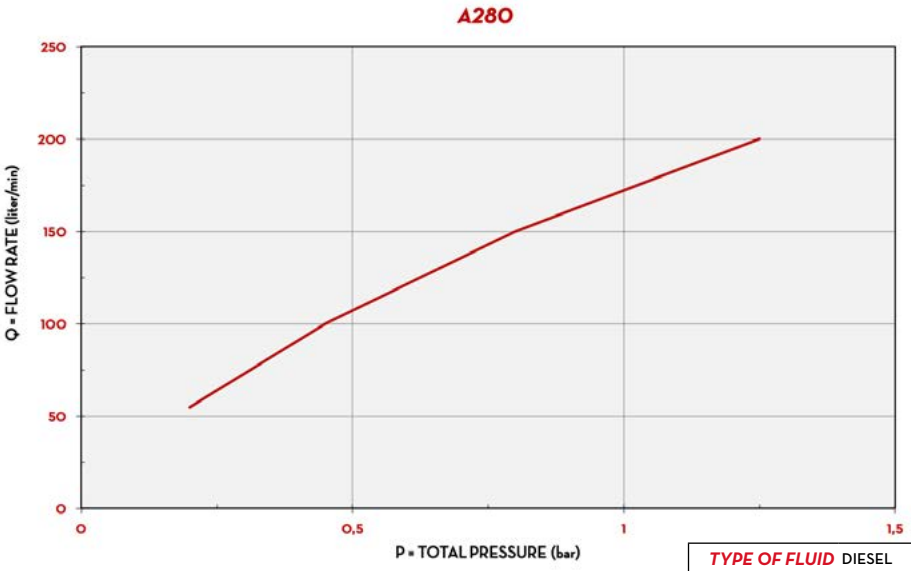

TYPE OF FLUID	DIESEL
TEMPERATURE	10°C

IN THE BOX

- A280 NOZZLE
- INSTRUCTION MANUAL

DETAILS

AUTOMATIC STOP

F 1" SWIVEL

DIMENSIONS

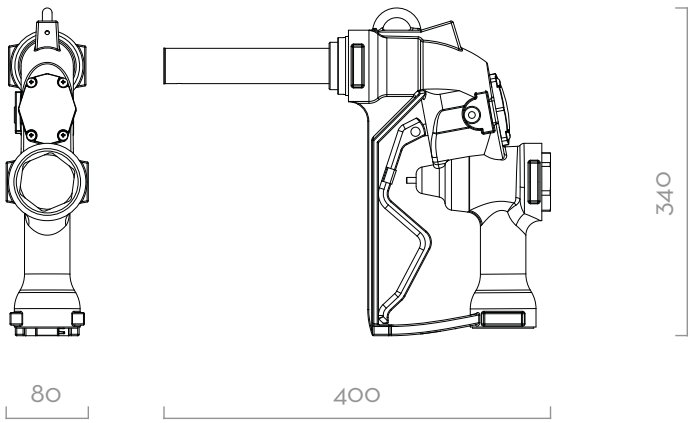

Dimensions expressed in millimeters

MATERIALS

- BODY: ALUMINIUM
- SEAL: VITON

TECHNICAL DATA

CODE	DESCRIPTION	FLUIDS TYPE	FLOW RATE		INLET		SPOUT
WITH SWIVEL			L/MIN	GPM	WITHOUT SWIVEL BSP	WITH SWIVEL BSP	EXT. Ø MM
F13249000	AUTOMATIC NOZZLE A280 1" 1/2 BSP	D	280	74	-	1 1/2"	38,5

A280

SELF 2000 / SELF 3000

FEATURES

- MANUAL
- VERSATILE
- HIGH EFFICIENCY
- LEVER PROTECTION

The PIUSI SELF 2000 / SELF 3000 manual nozzles perform the maximum efficiency thanks to the low-flow resistance and the wide range of applications including transfer systems run by gravity. They are supplied with removable lever protection and connectors.

SELF 2000 DIESEL

PERFORMANCE

UP TO 150 L/MIN	25MM OD SPOUT
FLOW RATE	SELF 2000 / SELF 3000

SELF 3000 DIESEL/GASOLINE

KUNSTSTOFF-ZAPFVENTIL WASSER/DIESEL

PACKAGING

CODE	WEIGHT		PACKAGING			N. BOXES / EUROPALLET	
	KG	LBS	MM	INCH	PCS/BOX	✈	🚢
00063900A	0,7	1,5	400X250X200	16X11X7,8	1		
00064900A	0,7	1,5	400X250X200	16X11X7,8	1		
00064902A	0,7	1,5	400X250X200	16X11X7,8	1		
00065001A	0,7	1,5	400X250X200	16X11X7,8	1		
00065600A	0,7	1,5	400X250X200	16X11X7,8	1		
F00641120	0,7	1,5	400X250X200	16X11X7,8	1		
F00641130	0,7	1,5	400X250X200	16X11X7,8	1		
F0065000A	0,7	1,5	400X250X200	16X11X7,8	1		
F00650020	0,7	1,5	400X250X200	16X11X7,8	1		
F0063000A	0,3	0,7	-	-	1		
F00641B00	0,7	1,5	400X250X200	16X11X7,8	1		

ANY BIODIESEL | AIR | ANTIFREEZE | AdBlue® | BIODIESEL | DIESEL | FOOD | GASOLINE | GREASE | KEROSENE | OIL | WATER | WINDSCREEN

CHART

TYPE OF FLUID	DIESEL
TEMPERATURE	18°C

IN THE BOX

- SELF 2000/ SELF 3000 NOZZLE
- INSTRUCTION MANUAL

DETAILS

LEVER PROTECTION

ROTATING SWIVEL

DIMENSIONS

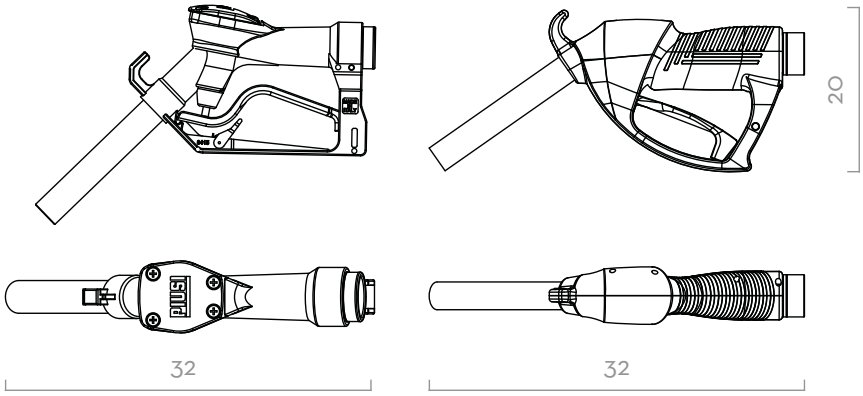

MATERIALS

- BODY: ALUMINIUM
- SEAL: VITON

Dimensions expressed in millimeters

TECHNICAL DATA

CODE	DESCRIPTION	FLUIDS TYPE	FLOW RATE		INLET		SPOUT
			L/MIN	GPM	SWIVEL	Ø BSP	EXT. Ø MM
00063900A	SELF 2000 1" BSP UNLEADED	D G O	120	32	BUCHSE	1" BSP	20
00064900A	SELF 2000 3/4" BSP	D O	120	32	BUCHSE	3/4" BSP	25
00064902A	SELF 2000 3/4" BSP UNLEADED	D G O	120	32	BUCHSE	3/4" BSP	20
00065001A	SELF 3000 1" BSP UNLEADED	D O G	150	40	BUCHSE	1" BSP	20
00065600A	SELF 2000 1" BSP SPOUT 25 MM	D O	120	32	BUCHSE	1" BSP	25
F00641120	SELF 2000 W/HOSE TAIL D.20 SPOUT 25 MM	D O	120	32	BUCHSE	3/4" BSP	25
F00641130	SELF 2000 1" BSP	D O	120	32	BUCHSE	1" BSP	25
F0065000A	SELF 3000 1" BSP LEADED SPOUT	D O	150	40	BUCHSE	1" BSP	25
F00650020	SELF 3000 1" BSP LEADED SPOUT S/P	D G O W	150	40	BUCHSE	1" BSP	25
F0063000A	PLASTIC NOZZLE BLACK W/SWIVEL 1" BSP	D O W	80	21	BUCHSE	1" BSP	34
F00641B00	SELF 2000 1" BSP B100	B20	120	32	BUCHSE	1" BSP	20

SELF 2000 / SELF 3000

NOZZLES ACCESSORIES

AUTOMATIC NOZZLES

A60 / A80 / A120 / A140	CODE	DESCRIPTION	
	F00623100	SWIVEL 34.1 M W/FILTER	F00623100
	F0062500A	SWIVEL 3/4IN X 20MM§	

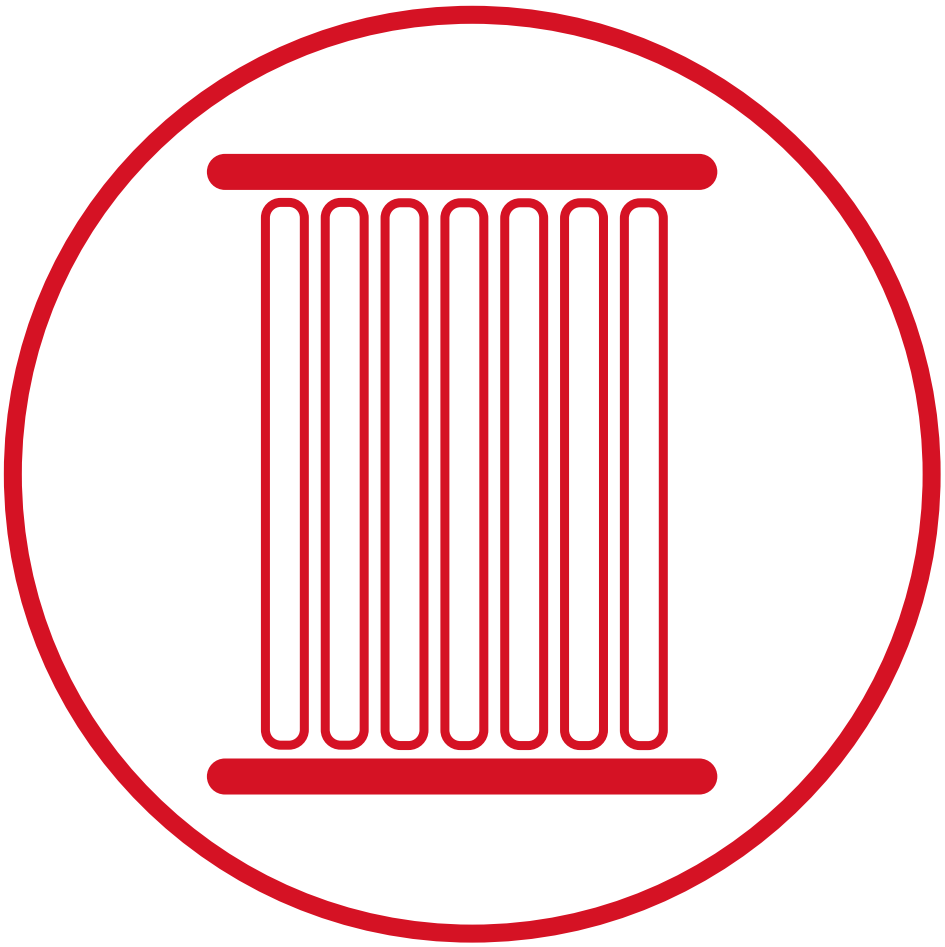

FILTRATION

FILTROLL

FEATURES

- DOUBLE-STAGE FILTRATION
- SPIRAL TUBE
- EASY TO HANDLE
- LARGE-DIAMETER WHEELS

The PIUSI FILTROLL is an innovative portable unit that provides a complete double filtering capacity of any kind of tank while absorbing water and impurities. The built-in sturdy trolley allows the operator to easily handle this device in any condition. It is equipped with suction pipe and integrated bottom valve.

PERFORMANCE

UP TO 56 L/MIN FLOW RATE	AC/DC VOLTAGE POWER
30µ WATER ABSORPTION FILTERING	5µ IMPURITIES FILTERING

FILTROLL

PACKAGING

CODE	WEIGHT		PACKAGING		
	KG	LBS	MM	INCH	PCS/BOX
F00506000	35	77,2	790X590X590	31,1X23,2X23,2	1
F0050606A	40	88,2	790X590X590	31,1X23,2X23,2	1

CHART

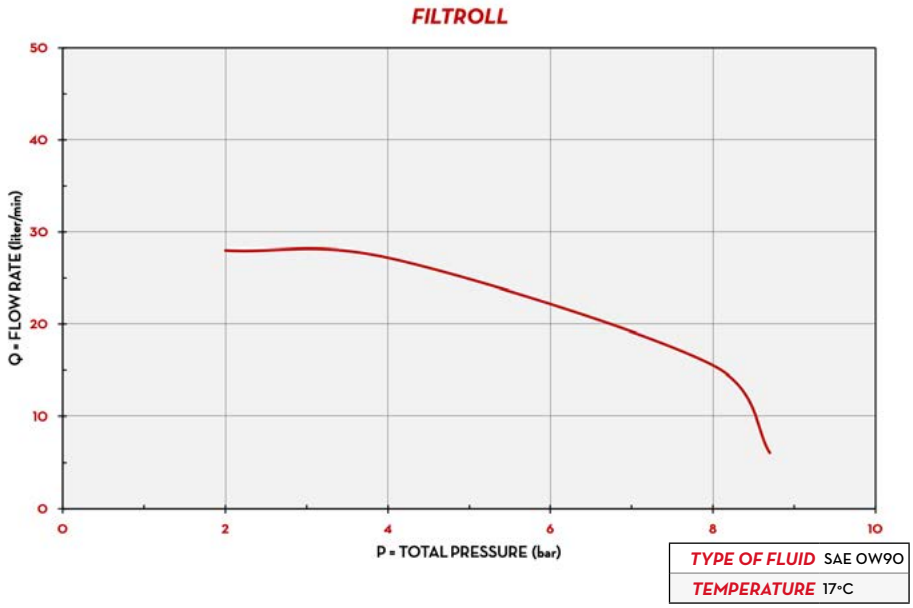

TYPE OF FLUID	SAE OW90
TEMPERATURE	17°C

IN THE BOX

- FILTROLL UNIT
- SUCTION HOSE
- DELIVERY HOSE
- NOZZLE
- INSTRUCTION MANUAL

DETAILS

TWO-STEP FILTRATION

WATER/IMPURITIES FILTERS

DIMENSIONS

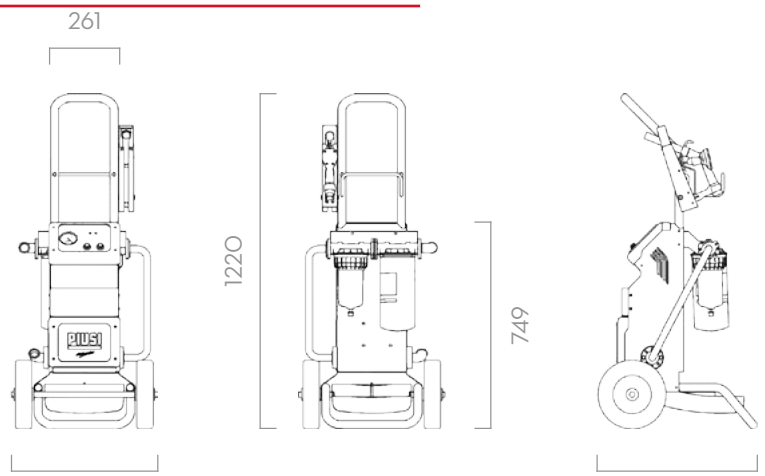

Dimensions expressed in millimeters

MATERIALS

- BODY: CAST IRON
- ROTOR: SINTHERED STEEL
- VANES: TECHNOPOLYMER
- SHAFT: STEEL
- FILTER: ABSORBENT FILTERING PAPER

TECHNICAL DATA

CODE	DESCRIPTION	FLUIDS TYPE	FLOW RATE		VOLTAGE			PUMP	HOSE LENGTH	
			L/MIN	GPM	AC V./HZ DC VOLT	POWER WATT	AMP. MAX.	TYPE	DELIVERY M/FT.	SUCTION M/FT
F00506000	FILTROLL DIESEL	D	56	14,8	230/50-60	350/600	3/6	PANTH. 56	4 / 13,1	3 / 9,8
F0050606A	FILTROLL 12V DIESEL	D	56	14,8	12	300	35	PANTH. DC	4 / 13,1	4 / 13,1

FILTER CARTRIDGE

CODE	DESCRIPTION	MICRO µm	EFFICIENCY
F0061102A	WATER CAPTOR CART. 150 L/MIN	30	200
F00611030	CLEAR CAPTOR CARTRIDGE	5	2

FILTER HEAD

F1693400A	FILTER HEAD 70/100LT W/MANOM	-	-
F15744000	CLEAR CAPTOR FILTER HEAD	-	-

AVAILABLE IN VERSION 230V/60HZ, 120V/60HZ

WATER CAPTOR

FEATURES

- BURSTING PRESSURE 10 BAR
- REPLACEABLE CARTRIDGE
- HIGH EFFICIENCY
- SMALL SIZE

The PIUSI WATER CAPTOR is a filter that absorbs any residual water particles that may be present in the fluid. The innovative cartridge needs to be replaced when filtering capacity is reduced due to the amount of water particles already absorbed. Available both for 70 or 150 l/min flow rates, these filters are also available with 1" inch fitting.

PERFORMANCE

UP TO 150 L/MIN	3,5 BAR MAX
FLOW RATE	OPERATING PRESSURE

200β/30µ
FILTERING CAPACITY

WATER CAPTOR 150 L/MIN

PACKAGING

CODE	WEIGHT	PACKAGING		
	KG	DIMENSIONS MM	CARTRIDGE PSC / BOX	FILTER HEAD PCS/BOX
WATER CAPTOR				
F00611A0A	2,4	390X285X140	2	1
F00611A1A	2,3	390X285X140	1	1
WATER CAPTOR CARTRIDGE				
F0061101A	9,8	420X320X250	12	-
F0061102A	9,7	350X350X360	6	-
WATER CAPTOR FILTER HEAD				
F14640000	-	357X357X275	-	50
F15743000	0,9	200X120X240	-	1

ANY BIODIESEL | AIR | ANTIFREEZE | AdBlue® | BIODIESEL | DIESEL | FOOD | GASOLINE | GREASE | KEROSENE | OIL | WATER | WINDSCREEN

PRODUCTS

150 L/MIN WATER CAPTOR WITH WATER ABSORPTION

70 L/MIN WATER CAPTOR WITH WATER ABSORPTION

IN THE BOX

- FILTER HEAD
- WATER CAPTOR CARTRIDGE
- INSTRUCTION MANUAL

DETAILS

FILTER HEAD

WATER CAPTOR CARTRIDGE

DIMENSIONS

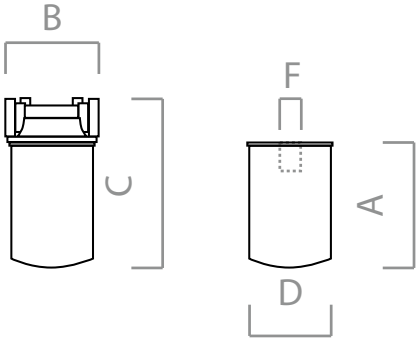

CODE	A (MM)	B (MM)	C (MM)	D (MM)	F
F00611A00	-	100	280	95	-
F00611A10	-	171	340	120	-
F00611010	220	-	-	95	1"-12 UNF
F00611020	275	-	-	120	1"1/2-16 UNF
F14640000	-	100	-	-	1"-12 UNF
F15743000	-	171	-	-	1"1/2-16 UNF 1"1/4 BSP

Dimensions expressed in millimeters

MATERIALS

- FILTER: ABSORBENT FILTERING PAPER

TECHNICAL DATA

CODE	DESCRIPTION	FLUIDS TYPE	FLOW RATE L/MIN	FLOW RATE GPM	INLET / OUTLET BSP	WATER ABSORBING	EFFICIENCY ß	MICRO µm	PRESSURE BAR
WATER CAPTOR									
F00611A0A	WATER CAPTOR FILTER 70L/MIN - 2 CARTD IT	D G	70	18,5	1"	YES	200	30	3,5
F00611A1A	WATER CAPTOR FILTER 150 L/MIN 1 CART IT	D G	150	39,6	1"	YES	200	30	3,5
WATER CAPTOR CARTRIDGE									
F00611101A	WATER CAPTOR CARTD. 70 L/MIN (12PCS) IT	D G	70	18,5	-	YES	200	30	3,5
F00611102A	WATER CAPTOR CART. 150 L/MIN (6PCS) IT	D G	150	39,6	-	YES	200	30	3,5
WATER CAPTOR FILTER HEAD									
F14640000	FILTER HEAD UNF 70 L/MIN	D G	-	-	1"	NO	-	-	-
F15743000	FILTER HEAD 70/100LT	D G	-	-	1"	NO	-	-	-

WATER CAPTOR

CLEAR CAPTOR

FEATURES

- *REPLACEABLE CARTRIDGE*
- *HIGH EFFICIENCY*
- *SMALL SIZE*

The PIUSI CLEAR CAPTOR is a range of cartridge filters that can be applied both on suction or delivery flow directions. They are equipped with a high-performance cartridge and a plastic container to collect all eventual impurities or water particles that may be present in the fluid. Thanks to the valve at the bottom of the container, it is possible to remove contaminations quickly and safely to ensure the maximum possible filter life.

PERFORMANCE

UP TO 100 L/MIN	5 BAR MAX
FLOW RATE	OPERATING PRESSURE
2β/5µ	
FILTERING CAPACITY	

PACKAGING

CODE	WEIGHT	PACKAGING		
	KG	DIMENSIONS MM	CARTRIDGE PSC / BOX	FILTER HEAD PCS/BOX
CLEAR CAPTOR				
F00611B00	2,3	390X285X140	2	1
F00611B10	2,0	390X285X140	2	1
F00611B60	2,3	390X285X140	1	1
CLEAR CAPTOR CARTRIDGE				
F00611030	1,9	190X190X240	6	-
F00611040	1,2	190X190X240	6	-
F00611060	0,2	190X190X240	1	1
CLEAR CAPTOR FILTER HEAD				
F15744000	1,0	200X120X240	-	1

ANY BIODIESEL | AIR | ANTIFREEZE | AdBlue® | BIODIESEL | DIESEL | FOOD | GASOLINE | GREASE | KEROSENE | OIL | WATER | WINDSCREEN

PRODUCTS

IN THE BOX

- FILTER CARTRIDGE
- METALLIC HEAD
- ADDITIONAL CARTRIDGE
- INSTRUCTION MANUAL

DETAILS

STRAINER CARTRIDGE

IMPURITIES PAPER CARTRIDGE

WATER PAPER CARTRIDGE

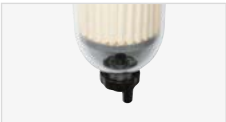

DRAIN VALVE

DIMENSIONS

CODE	A (MM)	B (MM)	C (MM)	D (MM)	F
F00611B00	-	171	270	-	-
F00611B10	-	171	270	-	-
F00611B60	-	171	270	-	-
F00611030	110	-	-	75	1" BSP M
F00611040	155	-	-	75	1" BSP M
F00611060	110	-	-	75	1" BSP M
F15744000	-	171	-	-	1" BSP F

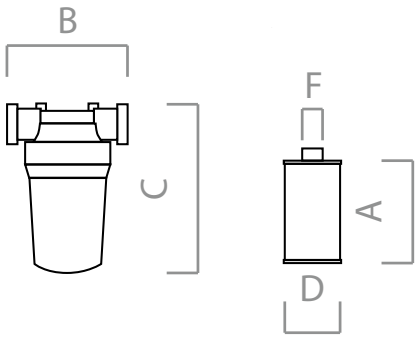

MATERIALS

- FILTER: ABSORBENT FILTERING PAPER

TECHNICAL DATA

CODE	DESCRIPTION	FLUIDS TYPE	FLOW RATE L/MIN	FLOW RATE GPM	INLET / OUTLET BSP	WATER ABSORBING	EFFICIENCY ß	MICRO µm	PRESSURE BAR
CLEAR CAPTOR									
F00611B00	CLEAR CAPTOR FILTER	B D G	100	26,4	1"	NO	2	5	5
F00611B10	CLEAR CAPTOR WATER FILTER	B D G	70	18,5	1"	YES	200	30	5
F00611B60	CLEAR CAPTOR STRAINER	B D G	100	26,4	1"	NO	2	120	5
CLEAR CAPTOR CARTRIDGE									
F00611030	CLEAR CAPTOR CARTRIDGE	B D G	100	26,4	-	NO	2	5	-
F00611040	CLEAR CAPTOR WATER FILTER CARTRIDGE	B D G	70	18,5	-	YES	200	30	-
F00611060	CLEAR CAPTOR STRAINER CARTRIDGE	B D G	100	26,4	-	NO	2	120	-
CLEAR CAPTOR FILTER HEAD									
F15744000	FILTER HEAD CLEAR CAPTOR	B D G	-	-	1"	NO	-	-	-

CLEAR CAPTOR

FUEL & BIOFUEL

FEATURES

- BURSTING PRESSURE 10 BAR
- REPLACEABLE CARTRIDGE
- HIGH EFFICIENCY
- SMALL SIZE

Among its range of filters, PIUSI has developed the FUEL&BIOFUEL FILTER: cartridge and water absorbing filters that prevent fluid contamination thanks to their improved filtration capacity up to 30µ.

BIO-FUEL FILTER

OIL AND FUEL FILTER

LINE FILTER 1-1

PERFORMANCE

UP TO 100 L/MIN FLOW RATE	3,5 BAR MAX OPERATING PRESSURE
FILTERING CAPACITY 200β/10µ BIOFUEL	FILTERING CAPACITY 2β/5-10µ FUEL

PACKAGING

CODE	WEIGHT	PACKAGING		
	KG	DIMENSIONS MM	CARTRIDGE PSC / BOX	FILTER HEAD PCS/BOX
BIOFUEL FILTERS				
F00611C00	2	390X285X140	2	1
F00611C10	1,9	390X285X140	1	1
BIOFUEL FILTER CARTRIDGE				
F14861000	-	-	1	-
FUEL FILTERS				
F0777200A	1	200X120X140	1	1
F914900B	2,6	390X285X140	1	1
FUEL FILTERS CARTRIDGE				
F0935900A	-	-	1	-
F16483010	9,2	500X300X200	15	-
FILTER HEAD				
F14528000	-	-	-	1
INLINE FILTER				
F08950000	-	-	-	-

ANY BIODIESEL | AIR | ANTIFREEZE | AdBlue® | BIODIESEL | DIESEL | FOOD | GASOLINE | GREASE | KEROSENE | OIL | WATER | WINDSCREEN

DIMENSIONS

	A (MM)	B (MM)	C (MM)	D (MM)	F
FILTER FOR BIOFUEL					
F00611C00	-	100	275	95	-
F00611C10	-	171	340	130	-
F14861000	220	-	-	95	1" - 12 UNF
R14862000	275	-	-	130	1" 1/2 - 16 UNF
F14640000	-	100	-	-	1" - 12 UNF
F15743000	-	171	-	-	1" 1/2 - 16 UNF 1" 1/4 BSP
FILTER FOR FUEL AND OIL					
F0777200A	-	100	160	98	-
F0914900A	-	171	236	132	-
F09149020	-	171	236	132	-
F00611000	145	-	-	98	3/4" BSP
F09359000	180	-	-	132	1" 1/4 BSP
F09359010	180	-	-	132	1" 1/4 BSP
F14528000	-	100	-	-	3/4" BSP
F15743000	-	171	-	-	1" 1/2 - 16 UNF 1" 1/4 BSP
F16483010	139	-	-	93	3/4" BSP
LINE FILTER					
F08950000	-	-	-	-	-

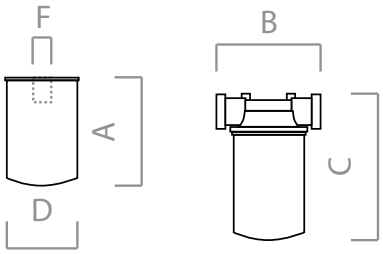

BIO-FUEL / OIL AND FUEL FILTERS

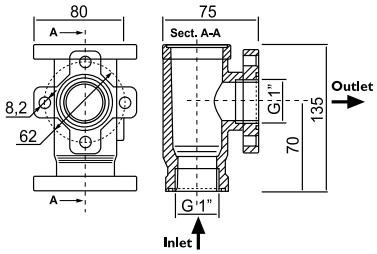

LINE FILTER 1-1

Dimensions expressed in millimeters

IN THE BOX

- FILTER CARTRIDGE
- METALLIC HEAD
- ADDITIONAL CARTRIDGE
- INSTRUCTION MANUAL

DETAILS

FILTER HEAD

REPLACEABLE CARTRIDGE

MESH STRAINER

LINE FILTER

MATERIALS

- FILTER: ABSORBENT FILTERING PAPER

TECHNICAL DATA

CODE	DESCRIPTION	FLUIDS TYPE	FLOW RATE L/MIN	FLOW RATE GPM	INLET / OUTLET BSP	WATER ABSORBING	EFFICIENCY ß	MICRO µm	PRESSURE BAR
BIOFUEL FILTERS									
F00611C00	BIO-FUEL FILTER 70 L/MIN 1"X1"	B G	70	18,5	1"	YES	200	10	3,5
F00611C10	BIO-FUEL FILTER 100 L/MIN 1"X1"	B G	100	26,4	1"	YES	200	10	3,5
BIOFUEL FILTER CARTRIDGE									
F14861000	CARTRIDGE 70 L/MIN BIO-FUEL	B G	70	19,5	-	YES	200	10	FUEL
FUEL FILTERS									
F0777200A	60 L/MIN FILTER WITH HEAD	B D G O	60	15,9	1"	NO	2	10	12
F914900B	100 L/MIN FILTER WITH HEAD	B D G O	100	26,4	1"	NO	2	10	12
FUEL FILTERS CARTRIDGE									
F0935900A	CARTRIDGE 100 L/MIN	B D G O	100	26,4	-	NO	2	10	12
F16483000	CARTUCCIA 10 MIC FILTRO 3/4" IN PIUSI_BOX	B D G O	60	15,9	-	NO	2	10	12
FILTER HEAD									
F14528000	FILTER HEAD 3/4 BSP 60 L/MIN	B D G O	-	-	1"	NO	-	-	-
INLINE FILTER									
F08950000	LINE FILTER	B D G O	-	-	1"	NO	-	-	-

FUEL & BIOFUEL

FOOT VALVE

FEATURES

- *HEAVY DUTY*
- *STURDY STRUCTURE*
- *LOW PRESSURE DROP*
- *ANTI-SHOCK MATERIALS*

The FOOT VALVE designed and engineered by PIUSI is a new concept of valve for fuel suction hoses on machinery. It is fitted with a mesh filter for diesel fuel residues, anti-shock materials to avoid damage caused by dropping and, thus, a low dropping pressure. The quick locking/unlocking and the clear indications of opening and closing complete its main features.

PERFORMANCE

1200µ	1”-3/4” BSP
FILTERING CAPACITY	INLET

FOOT VALVE WITH FILTER

PACKAGING

CODE	WEIGHT		PACKAGING		
	KG	LBS	DIMENSIONS MM	INCH	PCS/BOX
FOOT VALVE WITH FILTER					
F00609000	2,5	5,3	180X180X170	7,1X7,1X6,7	10
F00612000	0,2	0,44	-	-	1
F21476000	0,35	0,77	-	-	1
F15749000	1,35	3	215X147X116	8,5X5,8X4,6	12
F07978000	6,7	14,8	180X180X170	7,1X7,1X6,7	25
F08153000	0,15	0,33	-	-	1
F09170000	6,5	14,3	180X180X170	7,1X7,1X6,7	25

ANY BIODIESEL | AIR | ANTIFREEZE | AdBlue® | BIODIESEL | DIESEL | FOOD | GASOLINE | GREASE | KEROSENE | OIL | WATER | WINDSCREEN

F00609000
Ø25

F00612000
Ø19

F21476000
1"-1/2 BSP

F07979000
1"BSP

F10571000
3/4"BSP

F0775700A (20pz)
1" x Ø20
F0776400A (20pz)
1" x Ø25

F15749000
1" BSP

1"BSP

F07978000
F09170000
(SAFETY VALVE)

1" BSP

1"BSP

F08153000

3/4" BSP

3/4"BSP

TECHNICAL DATA

CODE	DESCRIPTION	FLUIDS TYPE	SAFETY VALVE					MICRO µm
FOOT VALVE WITH FILTER								
F00609000	FOOT VALVE CON FILTRO 1" BSP	D G O	YES	YES	-	YES	YES	1200 µm
F00612000	FOOT VALVE CON FILTRO 3/4" BSP	D G O	YES	YES	-	YES	YES	1200 µm
F21476000	FOOT VALVE W/FILTER 1"1/2 BSP	D O		-	YES	YES	-	1200 µm
F15749000	1" WITH BUILT-IN SAFETY VALVE	D G O	YES	YES	-	-	-	-
F07978000	FOOT VALVE WO/FILTER 1" BSP	D O	-	-	YES	-	-	-
F08153000	FOOT VALVE WO/FILTER 3/4" BSP	D O	-	-	YES	-	-	-
F09170000	HIGH PRESSURE VALVE 1" BSP	D O	YES	-	YES	-	-	-

FOOT VALVE

TANK MONITORING

OCIO

FEATURES

- LOW/HIGH LEVEL ALARMS
- FLUID MEASURES INDICATION
- BUILT-IN DISPLAY

OCIO is PIUSI's tank level indicator suitable for any kind of fluid storaged in tanks up to a 4 mt depth. It gives a real time indication of the fluid quantity inside the tank. It is easy to calibrate and has two alarms that can be adjusted at a specific high and low level for high and low levels.

PERFORMANCE

UP TO **4MT** HEIGHT TANK	**± 1%** FULL SCALE ACCURACY
UP TO **50 MT** LENGTH PROBE TUBE	UP TO **30 CST** VISCOSITY

OCIO

10 METERS HOSE

BRASS PROBE

PACKAGING

CODE	WEIGHT		PACKAGING		
	KG	LBS	MM	INCH	PCS/BOX
F00755100	2,2	4,8	300X410X100	11,8X16,1X3,9	1
F00755160	2,2	4,8	300X410X100	11,8X16,1X3,9	1

ANY BIODIESEL | AIR | ANTIFREEZE | AdBlue® | BIODIESEL | DIESEL | FOOD | GASOLINE | GREASE | KEROSENE | OIL | WATER | WINDSCREEN

FUNCTIONING

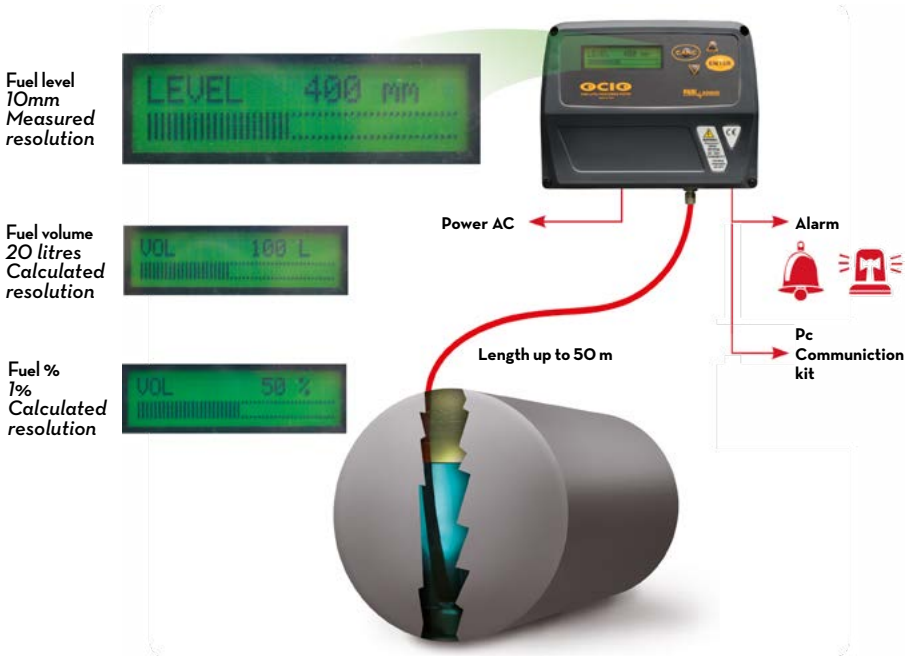

IN THE BOX

- OCIO UNIT
- PROBE
- 10 MT TUBE
- INSTRUCTION MANUAL

DETAILS

BRASS PROBE

2 ALARMS

DIMENSIONS

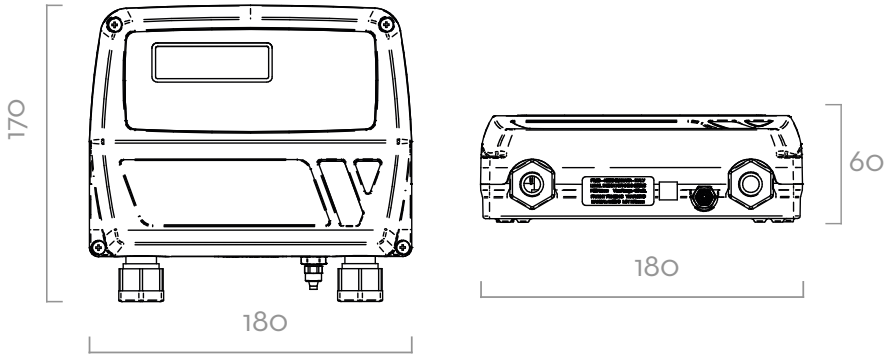

MATERIALS

- PROBE: BRASS
- TUBE: TECHNOPOLYMER

Dimensions expressed in millimeters

TECHNICAL DATA

CODE	DESCRIPTION	FLUIDS TYPE	VISCOSITY	VOLTAGE		RS EXIT
			cSt	AC V./HZ	POWER WATT	
FO075510D	LEVEL INDICATOR OCIO LV / RS OUTPUT	A B D O W	UP TO 30	230/50	20	AVAILABLE
FO075516O	LEVEL INDICATOR OCIO LV / 4/20 mA OUTPUT	A B D O W	UP TO 30	230/50	20	AVAILABLE

OCIO

OCIO 2.0

FEATURES

- LOW/HIGH LEVEL ALARMS
- FLUID QUANTITY INDICATION
- FLUID HEIGHT INDICATION
- BUILT-IN DISPLAY
- COMPATIBLE WITH SSM 2.0, MCO 2.0 AND B.SMART

With its brand-new design, OCIO 2.0 by PIUSI is the upgraded version of the tank level indicator compatible with SSM 2.0 and MCO 2.0 systems. It requires a LAN/Wi-Fi connection to communicate with the software. It maintains all the performances of the standard OCIO. Thanks to its interchangeable probe, OCIO 2.0 is compatible with several fluids.

PERFORMANCE

UP TO **4MT** HEIGHT — TANK	**± 1%** FULL SCALE — ACCURACY
UP TO **50 MT** LENGTH — PROBE TUBE	UP TO **30 CST** — VISCOSITY

OCIO 2.0

10 METERS HOSE

BRASS PROBE

PACKAGING

CODE	WEIGHT		PACKAGING		
	KG	LBS	MM	INCH	PCS/BOX
F00755260	2,2	4,8	300X410X100	11,8X16,1X3,9	1
F00755220	2,2	4,8	300X410X100	11,8X16,1X3,9	1
F00755210	2,2	4,8	300X410X100	11,8X16,1X3,9	1

ANY BIODIESEL | AIR | ANTIFREEZE | AdBlue® | BIODIESEL | DIESEL | FOOD | GASOLINE | GREASE | KEROSENE | OIL | WATER | WINDSCREEN

CONNECTION

IN THE BOX

- OCIO 2.0
- PROBE
- 10 MT TUBE
- INSTRUCTION MANUAL

DETAILS

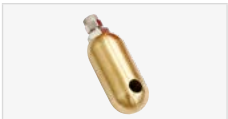
BRASS PROBE (INOX PAG. 184)

2 ALARMS

INTEGRATED LAN ADAPTER

SSM 2.0 SELF SERVICE MANAGEMENT
SSM 2.0 SOFTWARE (pag. 28)

FUNCTIONING

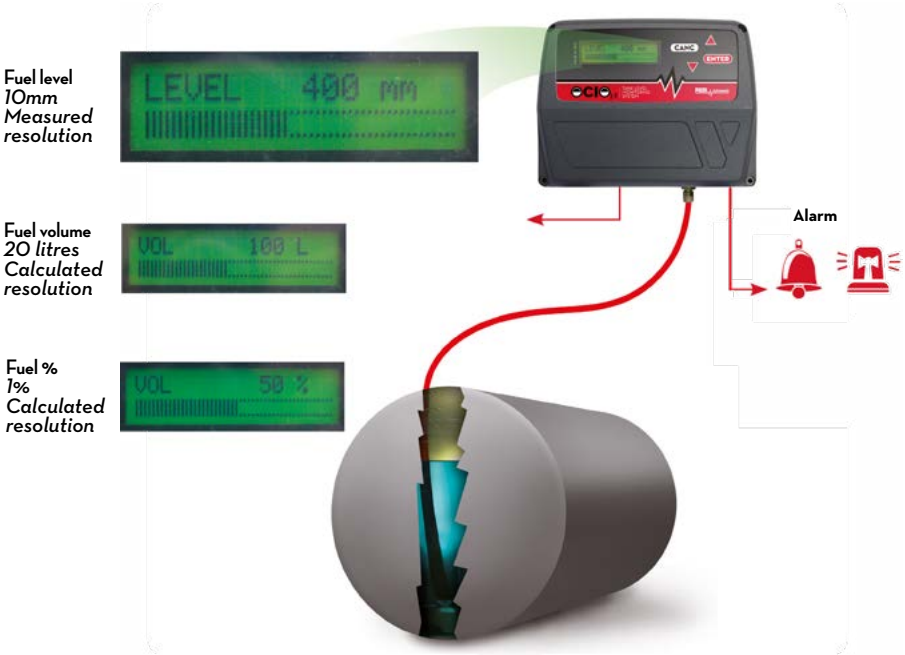

MATERIALS

- PROBE: BRASS
- TUBE: TECHNOPOLYMER

TECHNICAL DATA

CODE	DESCRIPTION	FLUIDS TYPE	VISCOSITY	VOLTAGE		RS EXIT
			cSt	AC V./HZ	POWER WATT	
F0075526O	LEVEL INDICATOR OCIO MC 2.0	A B D O W	UP TO 30	230-50/60	20	REQUIRED
F0075522O	LEVEL INDICATOR OCIO RS485 2.0	A B D O W	UP TO 30	230-50/60	20	REQUIRED
F0075521A	LEVEL INDICATOR OCIO WIFI 2.0	A B D O W	UP TO 30	230-50/60	20	REQUIRED

OCIO 2.0

TANK MONITORING ACCESSORIES

TANK LEVEL INDICATORS

OCIO	CODE	DESCRIPTION	
	F1391300A	KIT 50 MT OCIO PIPE D.6X4	F1391300A

OCIO 2.0	CODE	DESCRIPTION	
	F1391300A	KIT 50 MT OCIO PIPE D.6X4	F1391300A

MC
PIUSI
STOP
CANCEL
ENTER
CANC
ENTER
CIO 2.0
TANK LEVEL MONITORING SYSTEM
PW WI-FI

HOSE REEL

DIESEL HOSE REEL

FEATURES

- STURDY STRUCTURE
- HAND PROTECTION
- CORROSION RESISTANCE
- REDUCED PRESSURE LOSS
- HEAVY DUTY CONDITIONS

PIUSI automatic DIESEL HOSE REELS for diesel have been designed to ensure high efficiency. The sturdy structure can guarantee the best performance also in heavy duty conditions.

PERFORMANCE

15 BAR	MAX 20 MT
MAX OPERATING PRESSURE	LENGTH HOSE BOUND

AUTOMATIC HOSE REEL WITH HOSE

HOSE DIESEL HOSE REEL FOR 12M HOSE VERSION

PACKAGING

CODE	WEIGHT		PACKAGING			N. BOXES / EUROPALLET	
	KG	LBS	MM	INCH	PCS/BOX	✈	🚢
WITHOUT HOSE							
F0075000A	19	41,9	550X260X540	-	1	12	20
F0075001A	18	39,7	550X260X540	-	1	12	20
F0075008A	15	33,1	550X260X540	-	1	12	20
F0075025A	22,3	49,1	560X350X560	-	1	12	20
F0075031O	21	46	550X260X540	-	1	12	20
F0075018B	21	46	550X260X540	-	1	12	20
WITH HOSE							
F0075002B	26	57,3	550X260X540	-	1	12	20
F0075003B	25	55,1	550X260X540	-	1	12	20
F0075023B	25	55,1	550X260X540	-	1	12	20
F0075004B	22	49,5	550X260X540	-	1	12	20
F0075012B	22	49,5	550X260X540	-	1	12	20
F0075024B	23	50,7	550X260X540	-	1	12	20
F0075009B	18	39,6	550X260X540	-	1	12	20
F0075010B	27	59,5	550X260X540	-	1	12	20
F0075019B	27	59,5	560X350X560	-	1	8	12
F0075026B	27	59,5	560X350X560	-	1	8	12
F0075013B	23	50,7	550X260X540	-	1	12	20

INSTALLATION&DIMENSIONS

Different ways to install PIUSI's hose reels: they can be easily placed wherever you need them without any problem about functionality and safety. PIUSI's products are without a doubt designed to support your work in any condition.

IN THE BOX

- REEL
- WALL MOUNT BRACKET
- INSTRUCTION MANUAL

ROOF INSTALLATION

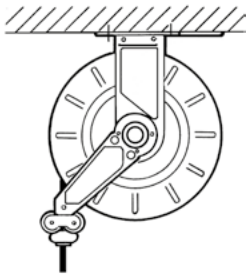

WALL INSTALLATION

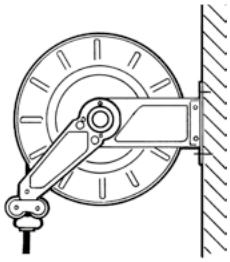

GROUND INSTALLATION

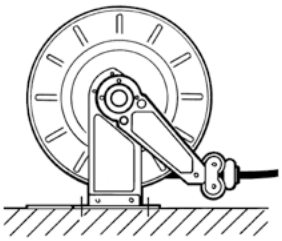

MODEL	HOSE REEL XL	HOSE REEL BIG	HOSE REEL SMALL
A	512	495	475
B	470	460	460
C	227	152	102
D	200	200	150
E	322	246	196
F	160	150	150
G	260	200	150
H	12	12	12
L	382	306	256

HOSE REEL FRONT / SIDE

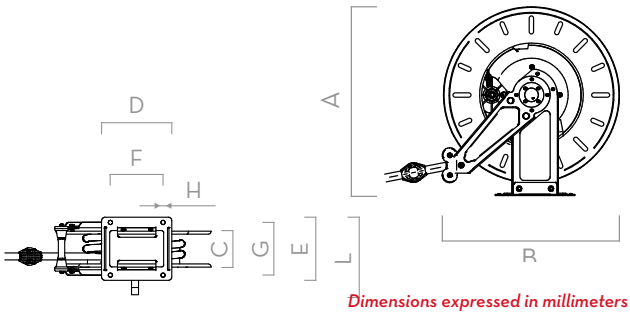

Dimensions expressed in millimeters

DETAILS

4 ROLLS HOSE GUIDE

AUTOMATIC HOSE REELS

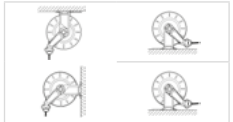

DIFFERENT INSTALLATIONS

STURDY DESIGN

MATERIALS

- BODY: CAST IRON
- HUB: SYNTHERED STEEL
- TUBE: RUBBER

TECHNICAL DATA

CODE	DESCRIPTION	FLUIDS TYPE	HOSE	MAX OPERATING PRESSURE	PRESSURE DROP	INLET	OUTLET	HOSE MAX LENGTH BOUND	HOSE LENGTH
			BSP	BAR	TYPE	WITH SWIVEL BSP	HOSETAIL BSP	METERS	METER
WITHOUT HOSE									
F0075000A	HOSE REEL 3/4" BIG	D	3/4"	10	0,15 @ 60 L/MIN	1" MALE	3/4"	14	-
F0075001A	HOSE REEL 1" BIG	D	1"	10	0,2 @ 80 L/MIN	1" MALE	1"	10	-
F0075008A	HOSE REEL 3/4" SMALL	D	3/4"	10	0,15 @ 60 L/MIN	1" MALE	3/4"	10	-
F0075025A	HOSE REEL 1" XL HEAVY DUTY (STEEL HUB)	D	1"	15	0,5 @ 80 L/MIN	1" FEMALE	1" MALE	15	-
F00750310	HOSE REEL NAKED XL 20M	D	3/4"	10	0,15 @ 60 L/MIN	1" FEMALE	3/4" MALE	20	-
F0075018B	HOSE REEL NAKED XL 15M	D	1"	10	0,2 @ 80 L/MIN	1" FEMALE	1" MALE	15	-
WITH HOSE									
F0075002B	HOSE REEL 8X1" BIG	D	1"	10	0,6 @ 80 L/MIN	1" FEMALE	1" MALE	-	8
F0075003B	HOSE REEL 10X1" BIG	D	1"	10	0,7 @ 80 L/MIN	1" FEMALE	1" MALE	-	10
F0075023B	HOSE REEL 10X1" BIG HEAVY DUTY (STEEL HUB)	D	1"	10	0,7 @ 80 L/MIN	1" FEMALE	1" MALE	-	10
F0075004B	HOSE REEL 10X3/4" BIG	D	3/4"	10	0,7 @ 60 L/MIN	1" FEMALE	1" MALE	-	10
F0075012B	HOSE REEL 10X3/4" BIG	D	3/4"	10	0,7 @ 60 L/MIN	1" FEMALE	3/4" MALE	-	10
F0075024B	HOSE REEL 10X3/4" BIG HEAVY DUTY (STEEL HUB)	D	3/4"	10	0,9 @ 60 L/MIN	1" FEMALE	1" MALE	-	10
F0075009B	HOSE REEL 8X3/4" SMALL	D	3/4"	10	0,6 @ 60 L/MIN	1" FEMALE	1" MALE	-	8
F0075010B	HOSE REEL 14X3/4" BIG	D	3/4"	10	0,6 @ 60 L/MIN	1" FEMALE	1" MALE	-	14
F0075019B	HOSE REEL 15X1" XL	D	1"	15	1 @ 80 L/MIN	1" FEMALE	1" MALE	-	15
F0075026B	HOSE REEL 15X1" XL HEAVY DUTY (STEEL HUB)	D	1"	15	0,8 @ 80 L/MIN	1" FEMALE	1" MALE	-	15
F0075013B	HOSE REEL 10 X 3/4" BIG GASOLINE	D	3/4"	15	0,7 @ 80 L/MIN	1" FEMALE	1" MALE	-	10

MINIMUM RADIUS OF CURVATURE FOR 3/4 HOSE SIZES "AND 1" OF AT LEAST 130MM; ELECTRICALLY, THE HOSE MUST BE CONDUCTOR R<1 MOhm/m

DIESEL HOSE REEL

HOSE REELS ACCESSORIES

OPEN HOSE REEL

DIESEL HOSE REEL	CODE	DESCRIPTION
	F1627900A	BIG HOSE REEL ROTATING SUPPORT
	F1629800A	BIG HOSE REEL FIXED BASE
	F16367000	DIESEL HOSE Ø25 L=1M CRIMPED 1"X1"
	F1731600A	SMALL HOSE REEL FIXED BASE
	F1731700A	SMALL HOSE REEL ROTATING SUPPORT

F1629800A
F1731600A

F1627900A
F1731700A

F16367000

PIUSI
000
PIUSI
SPACE

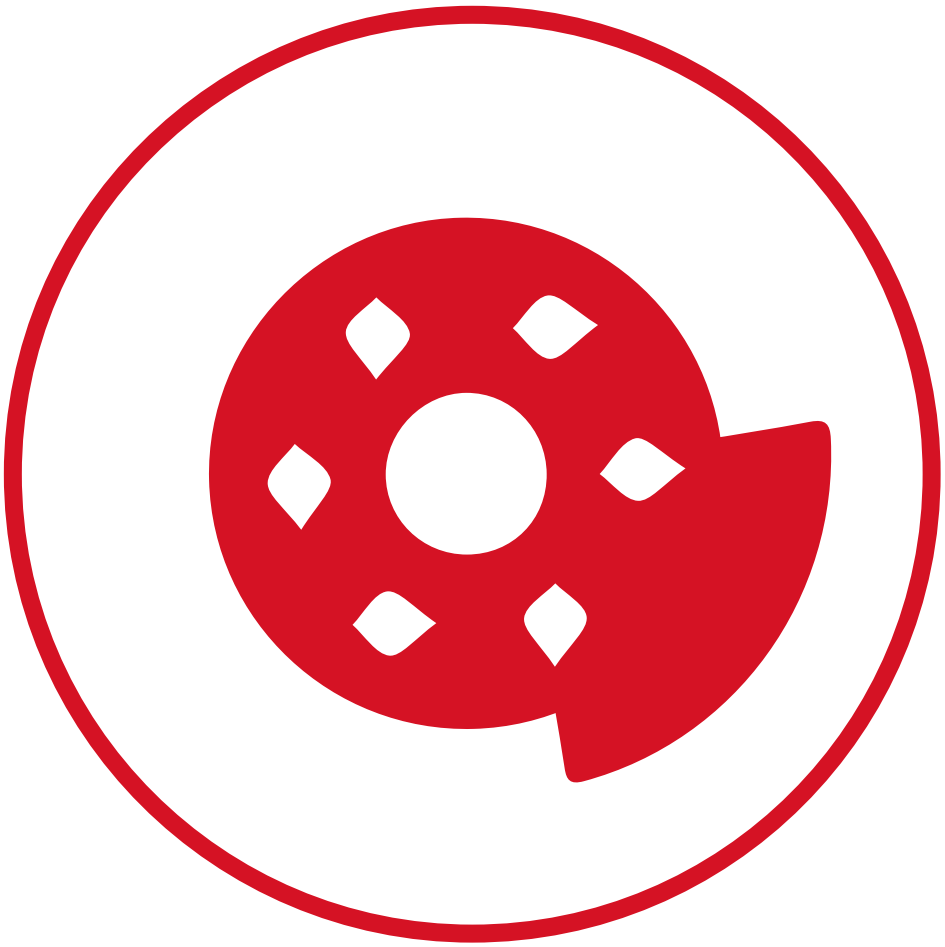

ACCESSORIES

ACCESS 85

FEATURES

- ACCESS CONTROL
- SUITABLE FOR ANY PUMP AND SYSTEM
- READY TO USE
- MULTI USERS
- LEVEL CONTROL INPUT

The PIUSI ACCESS 85 is an electronic control unit that allows users to control the withdrawal of fuel from a tank by several users. It is able to control: pump start and stop, user access by means of electronic key, the position of the dispenser gun with relevant go ahead. It also features a built-in emergency button to stop all operations.

PERFORMANCE

UP TO 85	AC CONTINUOUS DUTY
USERS	POWER

ACCESS 85

PACKAGING

CODE	WEIGHT		PACKAGING		
	KG	LBS	MM	INCH	PCS/BOX
F00702000	0,7	1,5	120X140X200	4,7X5,5X7,9	1
F00702010	0,7	1,5	120X140X200	4,7X5,5X7,9	1

FUNCTIONING

PUMP CONTROL

NOZZLE SWITCH CONTROL

TANK ALARM CONTROL

IN THE BOX

- ACCESS 85 UNIT
- INSTRUCTION MANUAL

DETAILS

DRIVER KEY

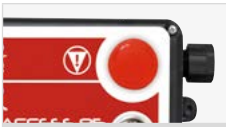

EMERGENCY BUTTON

TECHNICAL DATA

CODE	DESCRIPTION	FLUIDS TYPE	USERS	USERS KEY	VOLTAGE		
					AC V./HZ	POWER WATT	AMP. MAX.
F00702000	ACCESS 85	D G K O	85	NO	230	3,5	6
F00702010	KIT ACCESS 85	D G K O	85	4	230	3,5	6

ACCESS 85

CONNECTORS

FEATURES

- *STURDY STRUCTURE*
- *READY TO USE*
- *SEVERAL SOLUTIONS AVAILABLE*

The range of fuel products is completed with a wide array of accessories for connecting products to allow the best performance. Starting form the 2" connectors and quick coupling.

PERFORMANCE

2"	2"
DRUM CONNECTOR	QUICK COUPLING

2" DRUM CONNECTOR WITHOUT INTEGRATED VALVE

2" DRUM CONNECTOR WITH FLANGED AND INTEGRATED VALVE

2" DRUM CONNECTOR WITH INTEGRATED VALVE

2" QUICK COUPLING

PACKAGING

CODE	PACKAGING			
	KG	MM	INCH	PCS/BOX
2" CONNECTOR				
F17163000	0,6	133X98X85		1
F17190000	0,6	133X98X85		1
F08934010	3,9	830X160X100		
F17163010	0,8	133X98X85		1
2" QUICK COUPLING				
R09160000	0,9	133X98X85		1
F0893000A	0,9	133X98X85		1
EXTENSIBLE PIPE				
F08934000	0,2	680X40X40		
F08934020	1,9	680X40X40		1

ANY BIODIESEL | AIR | ANTIFREEZE | AdBlue® | BIODIESEL | DIESEL | FOOD | GASOLINE | GREASE | KEROSENE | OIL | WATER | WINDSCREEN

DIMENSIONS

COMPLETE KIT EXTENSIBLE SUCTION PIPE (1800MM)

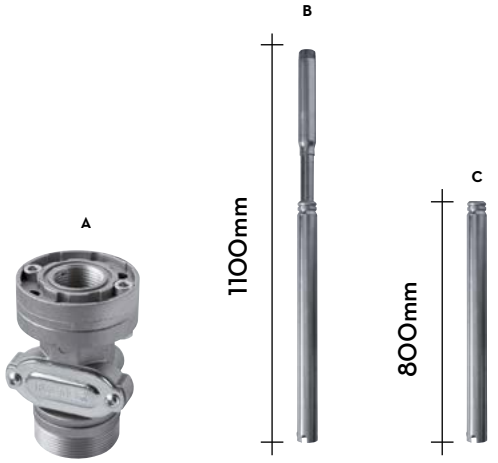

A:
DRUM CONNECTOR FLANGED AND VALVE

B:
EXTENSIBLE STEEL PIPE 1" BSP

C:
STEEL PIPE 1" BSP

CODE:
F008934010

WEIGHT:
3,9 KG

PACKAGING:
820X150X100

IN THE BOX

- CONNECTOR
- INSTRUCTION MANUAL

DETAILS

MESH STRAINER

INTEGRATED VALVE

DIMENSIONS

EXTENSIBLE PIPE PLASTIC MADE

EXTENSIBLE STEEL PIPE 1" BSP

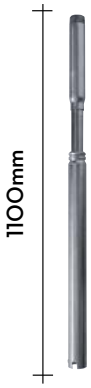

2" CONNECTOR

2" QUICK CONNECTOR

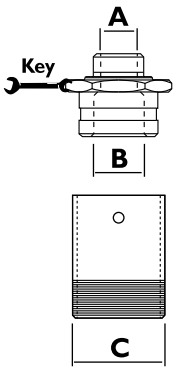

Dimensions expressed in millimeters

MATERIALS

- STEEL

TECHNICAL DATA

CODE	DESCRIPTION	FLUIDS TYPE	INTEGRATED VALVE	FILTER	INLET BSP	OUTLET BSP	THREADED FLANGE BSP	A BSP	B BSP	C BSP	KEY
2" CONNECTOR											
F17163000	DRUM CONNECTOR WITH INTEGRATED VALVE	D G K O	YES	YES	2"	-	NO	1"	1"	2"	-
F17190000	DRUM CONNECTOR WITHOUT INTEGRATED VALVE	D G K O	NO	YES	2"	-	NO	1"	1"	2"	-
F17163010	DRUM CONNECTOR WITH FLANGED AND INTEGRATED VALVE	D G K O	YES	YES	2"	1"	YES	1"	1"	2"	-
F08934010	KIT EXTENSIBLE SUCTION PIPE 1" 1800MM	D G K O	YES	YES	2"	1"	YES	1"	1"	2"	-
2" QUICK COUPLING											
R09160000	QUICK COUPLING 3/4"	D O	NO	NO	3/4"	1"	NO	M 3/4"	F 1"	M 2"	60
F0893000A	QUICK COUPLING 1"	D O	NO	NO	1"	1"	NO	M 1"	F 1"	M 2"	60
EXTENSIBLE PIPE											
F08934000	EXTENSIBLE SUCTION PIPE 1" 940MM PLAST.	D G K O	-	-	1"	1"	-	-	-	-	-
F08934020	EXTENSIBLE SUCTION PIPE 1" 1100MM STEEL	D G K O	-	-	1"	1"	-	-	-	-	-

CONNECTORS

COUPLING & FITTINGS

FEATURES

- *EASY TO USE*
- *VERSATILITY AND SEVERAL SHAPES*

PIUSI COUPLING & FITTINGS are engineered to fit every application context represen-ting the perfect solution to connect the fuel equipment.

TECHNICAL DATA

ELBOWS

CODE	DESCRIPTION	INLET / OUTLET A	INLET / OUTLET B	INLET / OUTLET C	KEY 1	KEY 2	Q.TY
F07806000	ELBOW F .” BSP / F .” BSP	F 3/4”BSP	F 3/4”BSP	-	-	-	-
F07805000	ELBOW M .” BSP / F .” BSP	M 3/4”BSP	F 3/4”BSP	-	-	-	-
F08609000	ELBOW F 1” BSP / F 1” BSP - BRASS	F 1” BSP	F 1” BSP	-	-	-	-
F07988000	ELBOW M 1” BSP / F 1” BSP - BRASS	M 1” BSP	F 1” BSP	-	-	-	-
F14567000	ELBOW ROTATING CONNECTOR 90° 1” M/F	M 1” BSP	F 1” BSP	-	-	-	-

ROTATING ELBOWS

ELBOWS

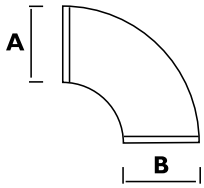

HOSE TAILS

F0826700A	HOSETAIL 1/2” X D.20 + OR	1/2” BSP	19 MM	-	24	-	1
F0643700A	HOSETAIL 3/4” X D.20 + OR (20 PCS)	3/4” BSP	19 MM	-	32	-	20
F0776800B	HOSETAIL 3/4” X D.25 + OR (20 PCS)	3/4” BSP	25 MM	-	32	-	20
F0775700A	HOSETAIL 1” X D.20 + OR (20 PCS)	1” BSP	19 MM	-	37	-	20
F0776400A	HOSETAIL 1” X D.25 + OR (20 PCS)	1” BSP	25 MM	-	37	-	20

HOSE TAILS

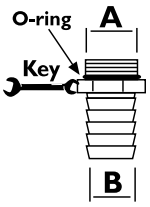

HQC

		KG.	MM.	PCS/BOX
F00636000	HQC - HOSE QUICK COUPLING 1” BSP	0,46	80X80X75	1

HQC

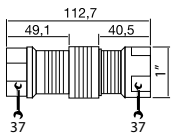

SEALANT PASTE

		GR.	ML.
F08173000	ADEHESIVE PASTE LOXEAL 18-10	130	-
F10767000	THREAD SEALANT BLUE LOXEAL 55.03		250
F12278000	THREAD SEALANT GREEN LOXEAL 85.21		250

SEALANT PASTE

ANY BIODIESEL | AIR | ANTIFREEZE | AdBlue® | BIODIESEL | DIESEL | FOOD | GASOLINE | GREASE | KEROSENE | OIL | WATER | WINDSCREEN

TECHNICAL DATA

CODE	DESCRIPTION	INLET / OUTLET			KEY		Q.TY
		A	B	C	1	2	

SLEEVE

F08137000	SLEEVE HOSE DIAM. 20	28 MM	20 MM	-	-	-	1
F08138000	SLEEVE HOSE DIAM. 25	36 MM	28 MM	-	-	-	1
F17126000	SLEEVE F 1" BSP / F 1" BSP (20 PCS)	F 1" BSP	F 1" BSP	-	-	-	20

SLEEVE

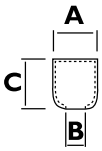

COUPLINGS

F07762000	NIPPLE M .” BSP / M 1" BSP	M 3/4"BSP	M 1" BSP	-	34	-	-
F08913000	NIPPLE M 1" BSP - M .” BSP	M 1" BSP	M 1" 1/2" BSP	-	30	-	-
F07765000	NIPPLE M 1" BSP / M 1" BSP	M 1" BSP	M 1" BSP	-	34	-	-
F07766000	NIPPLE M .” BSP / M .” BSP	M 3/4"BSP	M 3/4"BSP	-	34	-	-

NIPPLE

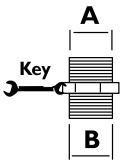

NIPPLE

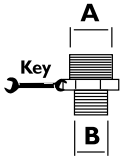

FITTINGS

F07441000	FITTING M .” BSP / F .” BSP	F 1/2"BSP	M 3/4"BSP	-	27	-	-
F07760000	FITTING M 1" BSP / F .” BSP	F 3/4"BSP	M 1" BSP	-	34	-	-
F07889000	FITTING F 1" BSP / M .” BSP	F 1" BSP	M 3/4"BSP	-	-	-	-
F1425800A	ADAPTER FOR TANK 2" X D.36	F 2" BSP	D.36	-	-	-	-

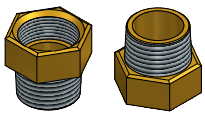

FITTINGS

SWIVEL UNION

000890000	SWIVEL UNION M .” BSP X 27MM	3/4" BSP	19 MM	27 MM	38 MM	38 MM	-
000891000	SWIVEL UNION M 1" BSP X 27MM	1"	19 MM	27 MM	31 MM	31 MM	-
F00892000	SWIVEL UNION M 1" BSP X 35MM	1"	25 MM	35 MM	38 MM	38 MM	-
000893000	SWIVEL UNION M .” BSP X 32MM	3/4"	19 MM	32 MM	31 MM	31 MM	-
000894000	SWIVEL UNION M 1" BSP X 32MM	1"	19 MM	32 MM	38 MM	38 MM	-
000895000	SWIVEL UNION M 1" BSP X 38MM	1"	25 MM	38 MM	38 MM	38 MM	-

UNION

1

2

3

4

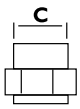

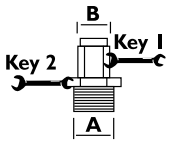

COUPLING & FITTINGS

FLANGED CONNECTIONS

FEATURES

- STURDY DESIGN
- EASY TO FIT
- SEVERAL SHAPES

Safe and guaranteed solutions to connect products: connections, elbows, full kits and flanges.

TECHNICAL DATA

CODE	DESCRIPTION	INLET / OUTLET				FLANGE	O-RING	OVAL RING	SCREW		GRUB SCREW	NUT
		A	B	C	H	N°	N°	N°	M8X20 N°	M8X30 N°	M8X50 N°	M8 N°

FLANGES

F0883200A	FLANGE D.80 1" E80/E120	-	1" BSP	80 MM	18 MM	-	-	-	-	-	-	-
F1290400A	KIT FLANGE 1" BSP	-	1" BSP	80 MM	18 MM	1	-	1	-	2	-	2
F0918000A	KIT FLANGE 1" BSP (2 PCS)	-	1" BSP	80 MM	18 MM	2	2	-	4	-	-	-
F1106200B	KIT FLANGE CUBE 70	-	1" BSP	80 MM	18 MM	1	1	-	2	-	-	-
R08417000	KIT N°2 OR SEAL 3156	-	-	-	-	-	2	-	-	-	-	-
F1444500A	KIT FLANGE .° BSP (2 PCS)	-	3/4" BSP	80 MM	18 MM	2	2	-	4	-	-	-
F0898500A	OR SEAL 3156 OVAL SECTION DIESEL ONLY	-	-	-	-	-	-	1	-	-	-	-
F08043000	SCREW M8X30 N°10 PIECES	-	-	-	-	-	-	-	-	10	-	-

FLANGE

FLANGE KIT

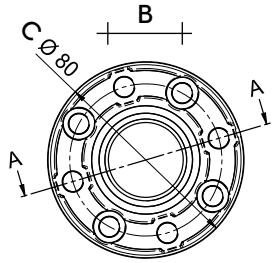

ANY BIODIESEL | AIR | ANTIFREEZE | AdBlue® | BIODIESEL | DIESEL | FOOD | GASOLINE | GREASE | KEROSENE | OIL | WATER | WINDSCREEN

TECHNICAL DATA

CODE	DESCRIPTION	DIMENSIONS	FLANGE	O-RING	OVAL RING	SCREW		GRUB SCREW	NUT
		LENGTH	N°	N°	N°	M8X20 N°	M8X30 N°	M8X50 N°	M8 N°

FLANGED TUBE

F1217200A	FLANGED TUBE 341MM§	341	-	-	-	-	-	-	-
F1222800B	FLANGED TUBE 300MM	300	-	-	-	-	-	-	-
F1082400A	KIT FLANGED + ELBOW + OR + SCREW	-	-	2	-	2	2	-	2

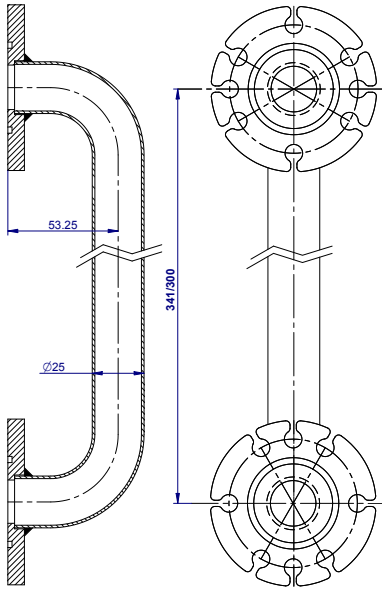

FLANGED TUBE 300/341

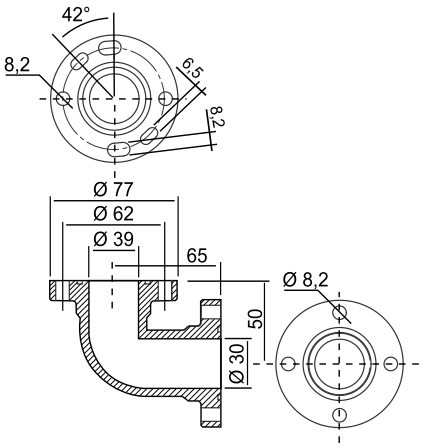

ELBOW

SCREW

NUT

FLANGE

O-RING

KIT FLANGED ELBOW

FLANGED CONNECTIONS

HOSE & SWIVEL

Diesel fuel delivery hoses, suction hoses, crimped hoses, rotating hose connectors: a wide range to complete the accessories product range.

TECHNICAL DATA

CODE	DESCRIPTION	FLUIDS TYPE	PRESSURE		VACUUM	DIMENSIONS				KEY	CAMLOCK
			BAR	PSI	BAR	A MM	B MM	S MM	L M/FT.		MALE/FEMALE BSP
DELIVERY HOSES											
F0060502A	DIESEL HOSE Ø20 PARKER 80 MT	D	10	-	-	20	27	-	80	-	-
F0060602A	DIESEL HOSE Ø25 PARKER 40MT	D	10	-	-	25	35	-	40	-	-
DELIVERY CRIMPED HOSES											
F11885000	DIESEL HOSE Ø20 L=4M CRIMPED -"X-"	D	10	-	-	3/4" BSP	3/4" BSP	20	4	-	-
F08561000	DIESEL HOSE Ø20 L=4M CRIMPED -"X1"	D	10	-	-	3/4" BSP	1" BSP	20	4	-	-
F08976000	DIESEL HOSE Ø20 L=4M CRIMPED 1"X1"	D	10	-	-	1" BSP	1" BSP	20	4	-	-
F12876000	DIESEL HOSE Ø20 L=6M CRIMPED -"X-"	D	10	-	-	3/4" BSP	3/4" BSP	20	6	-	-
F11063000	DIESEL HOSE Ø20 L=6M CRIMPED -"X1"	D	10	-	-	3/4" BSP	1" BSP	20	6	-	-
F08945000	DIESEL HOSE Ø20 L=6M CRIMPED 1"X1"	D	10	-	-	1" BSP	1" BSP	20	6	-	-
F11060000	DIESEL HOSE Ø20 L=7M CRIMPED 1"X1"	D	10	-	-	1" BSP	1" BSP	20	7	-	-
F12323000	DIESEL HOSE Ø20 L=8M CRIMPED 1"X1"	D	10	-	-	1" BSP	1" BSP	20	8	-	-
F11532000	DIESEL HOSE Ø20 L=10M CRIMPED -"X1"	D	10	-	-	3/4" BSP	1" BSP	20	10	-	-
F12929000	DIESEL HOSE Ø20 L=10M CRIMPED 1"X1"PARKE	D	10	-	-	1" BSP	1" BSP	20	10	-	-
011904000	CRIMPED HOSE Ø25 L=1.2M 1"X1"	D	10	-	-	1" BSP	1" BSP	25	1,2	-	-
F12794000	DIESEL HOSE Ø25 L=2M CRIMPED 1"X1"	D	10	-	-	1" BSP	1" BSP	25	2	-	-
F08560000	DIESEL HOSE Ø25 L=3M 1"X1"	D	10	-	-	1" BSP	1" BSP	25	3	-	-
F08977000	DIESEL HOSE Ø25 L=4M CRIMPED 1"X1"	D	10	-	-	1" BSP	1" BSP	25	4	-	-
F11264000	DIESEL HOSE Ø25 L=5M CRIMPED 1"X1"	D	10	-	-	1" BSP	1" BSP	25	5	-	-
F08858000	DIESEL HOSE Ø25 L=6M CRIMPED 1"X1"	D	10	-	-	1" BSP	1" BSP	25	6	-	-
F12784000	DIESEL HOSE Ø25 L=7M CRIMPED 1"X1"	D	10	-	-	1" BSP	1" BSP	25	7	-	-
F11540000	DIESEL HOSE Ø25 L=8M CRIMPED 1"X1"	D	10	-	-	1" BSP	1" BSP	25	8	-	-
F12785000	DIESEL HOSE Ø25 L=10M CRIMPED 1"X1"	D	10	-	-	1" BSP	1" BSP	25	10	-	-
F14412000	DIESEL HOSE Ø25 L=12M CRIMPED 1"X1"	D	10	-	-	1" BSP	1" BSP	25	12	-	-

DISPENSING HOSES

RUBBER HOSE

RUBBER SUCTION HOSE

PVC HOSE

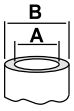

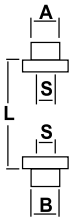

CRIMPED HOSE

HOSE KIT 1" 1/2

F18798000	KIT HOSE 1 1/2" 10 MT+CAMLOCK+HOSETAIL	D	10	145	-	1" 1/2 BSP	-	-	-	-	1" 1/2 BSP
F18799000	KIT HOSE 1 1/2" 20 MT+CAMLOCK+HOSETAIL	D	20	65,6	-	1" 1/2 BSP	-	-	-	-	1" 1/2 BSP

HOSE KIT 1" 1/2

CAMLOCK

ANY BIODIESEL | AIR | ANTIFREEZE | AdBlue® | BIODIESEL | DIESEL | FOOD | GASOLINE | GREASE | KEROSENE | OIL | WATER | WINDSCREEN

TECHNICAL DATA

CODE	DESCRIPTION	FLUIDS TYPE	PRESSURE		VACUUM	DIMENSIONS				KEY	CAMLOCK
			BAR	PSI	BAR	A MM	B MM	S MM	L M/FT.		MALE/FEMALE BSP
SUCTION HOSES											
F08870000	HOSE CARBUREX Ø25 50MT	D	10	-	- 0,9	25	33	-	50	-	-
F12120010	SUCTION SPIRAL HOSE D.25 60MT	D B O	10	-	-0,9	25	35	-	60	-	-
F1113100B	SUCTION SPIRAL PVC HOSE D.25 60MT	D O	10	-	-0,9	25	33	-	60	-	-
SUCTION CRIMPED SPIRAL HOSES											
F12117000	SUCTION SPIRAL HOSE D.25 CRIMP 1"/1" 1MT	D B O	10	-	- 0,9	1" BSP	1" BSP	25	1	-	-
F12118000	SUCT SPIRAL HOSE D.25 CRIMP 1"/1" 1.5MT	D B O	10	-	- 0,9	1" BSP	1" BSP	25	1,5	-	-
F12119000	SUCTION SPIRAL HOSE D.25 CRIMP 1"/1" 2MT	D B O	10	-	- 0,9	1" BSP	1" BSP	25	2	-	-
F13768000	SUCT SPIRAL HOSE D.25 CRIMP 1"/1" 3.5MT	D B O	10	-	- 0,9	1" BSP	1" BSP	25	3,5	-	-
F13695000	SUCTION SPIRAL HOSE D.25 CRIMP 1"/1" 5MT	D B O	10	-	- 0,9	1" BSP	1" BSP	25	5	-	-
F1640400A	KIT SUCT SPIRAL HOSE D.25 W/VALVE 4MT	D B O	10	-	- 0,9	1" BSP	1" BSP	25	4	-	-
SUCTION CRIMPED PVC SPIRAL HOSES											
F1113200A	TRAS. PVC HOSE Ø25 L=1.6M CRIMPED 1"X1"	D O	10	-	- 0,9	1" BSP	1" BSP	25	1,6	-	-
F11638010	TRAS. PVC HOSE Ø25 L=4M 1"X1" + FV	D O	10	-	- 0,9	1" BSP	1" BSP	25	4	-	-

RUBBER HOSE

SPIRAL RUBBER HOSE

SPIRAL PVC HOSE

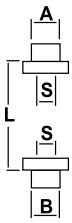

SWIVEL

000623000	SWIVEL M -" BSP / M 1" BSP	-	-	-	-	M 3/4"BSP	M 1" BSP	-	-	94	-
00062400A	SWIVEL M -" BSP / F -" BSP	-	-	-	-	M 3/4" BSP	F 3/4"BSP	-	-	38	-
F0062000A	SWIVEL M -" BSP / F 1" BSP	-	-	-	-	M 3/4" BSP	F 1" BSP	-	-	34	-
F0062200A	SWIVEL M 1" BSP / F 1" BSP	-	-	-	-	M 1" BSP	F 1" BSP	-	-	34	-
F00623100	SWIVEL M -" BSP / M 1" BSP W/FILTER	-	-	-	-	M 3/4" BSP	M 1" BSP	-	-	94	-
F0062500A	SWIVEL M -" BSP X 20MM	-	-	-	-	M 3/4" BSP	20 MM	-	-	38	-

ROTATING SWIVEL

ROTATING HOSE CONNECTORS

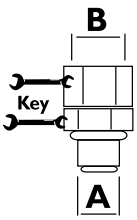

HOSE & SWIVEL

ACCESSORIES

ACCESS CONTROL

ACCESS 85	CODE	DESCRIPTION
	F1249600A	MANAGER KEY 2018
	F1590400A	KIT DRIVER KEY YELLOW (10PCS)
	F1623900B	NOZZLE HOLDER SS+CABLED SWITCH FM/MC
	F17121000	LEVEL PROBE FOR ACCESS 85

F1590400A

F1623900B

F1249600A

F17121000

ACCESS 85

MERCHANDISE

MERCHANDISE

PACKAGING

CODE	DESCRIPTION	WEIGHT		PACKAGING			
		KG	LBS	MM	INCH	PCS/PALLET	PCS/BOX
T-SHIRT WHITE							
PBG000026	PIUSI T-SHIRT WHITE BOX 10 PCS - L	1	-	35X26X18	-	-	10
PBG000027	PIUSI T-SHIRT WHITE BOX 10 PCS - XL	1	-	35X26X18	-	-	10
PBG000029	PIUSI T-SHIRT WHITE BOX 10 PCS - M	1	-	35X26X18	-	-	10
WATER BOTTLE							
PBG000037	PIUSI WATER BOTTLE - BOX 20 PCS	-	-	-	-	-	20
UMBRELLA							
PBG000030	PIUSI UMBRELLA - BOX 10 PCS	5,5	-	35X26X18	-	-	10

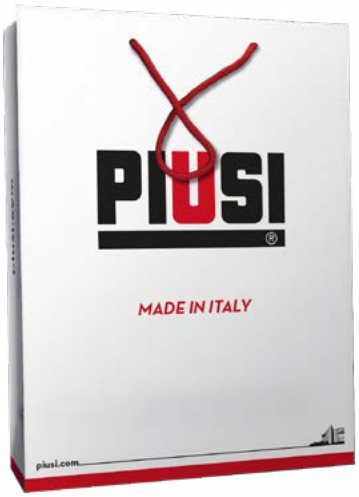

PACKAGING

CODE	DESCRIPTION	WEIGHT		PACKAGING			
		KG	LBS	MM	INCH	PCS/PALLET	PCS/BOX
METALLIC FLOOR STAND							
PBA000013	PIUSI METALLIC FLOOR STAND	76	-	120X100 (PALLET)	-	1	-
POSTER							
PBP000003	KIT POSTERS PIUSI - BOX 10 PCS	0,2	-	70X12	-	-	10
UMBRELLA							
PBG000030	PIUSI UMBRELLA - BOX 10 PCS	5,5	-	35X26X18	-	-	10
BAG							
PBG000035	PIUSI BAG 2018 - BOX 150 PCS	18,5	-	-	-	-	150
SPORTSPACK							
PBG000039	PIUSI SPORTSPACK – BOX 30 PCS	-	-	-	-	-	30
KEYRING							
PBG000041	PIUSI KEYRING -BOX 100 PCS	-	-	-	-	-	100

MERCHANDISE

NOTES

PIUSI FLUIDS' INFORMATION

ATEX/IECEX DIRECTIVE

SAFETY IN EXPLOSIVE ENVIRONMENTS

As of 1st July 2003, the ATEX directive came into force throughout the EEC. This directive became an obligatory requirement for all electrical and mechanical equipment intended for use in dangerous areas. Potentially explosive atmospheres exist where there is a risk of explosion due to mixtures of gas and air, steam and air, dust and air or other flammable combinations typical of petrol vapours.
If the electrical or mechanical material must be used in areas where there is an explosive atmosphere, it must be designed and built so as not to create/ to eliminate sources of ignition such as sparks, hot surfaces or static electricity and all sources of combustion able to ignite these mixtures. Risk areas for environments where gas and flammable vapours are present can range from AREA O (constant risk of explosion) to AREA 1 (risk of explosion probable) and AREA 2 (low risk and any risk of explosion persists for a short time only).

Atex

II 2 G

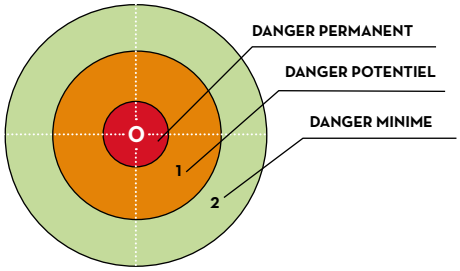

OUR PUMPS COMPLIES WITH THE FOLLOWING MARKING ATEX/IECEx

II	2	G	Ex	d	IIA	T4	Gb
GROUP	CATEGORY	TYPE OF EXPLOSIVE ATMOSPHERE	PERMANENT PREFIX	PROTECTION METHOD	GAS GLASS	TEMPERATURE CLASS	EQUIPMENT PROTECTION LEVEL

II = Group II comprises appliances intended for use in other environments (other than mining) in which explosive atmospheres are probable.
2 = High protection, Category 2 for AREA 1 GAS and AREA 2 GAS
G = Gas
Ex = Explosion-proof equipment certified according to the European ATEX directives
d = Explosion-proof cases (EN 60079-1)
IIA = Electrical appliances for potentially explosive environments other than mining. (Propane, Butane etc.)
T4 = The temperature of the pump will not exceed 135°C

PIUSI 's experience in the world of flammable liquids

PIUSI renews his natural propension to find solutions for the transfer of fluids, expanding its range with new products to dispensing flammable liquids.

Experience gained with pumps for transferring diesel fuel, combined with the growing demands of the market, have fostered the development of this new range of pumps for gasoline, kerosene and diesel, that satisfy the criteria of strict ATEX directives concerning the use of materials in potentially explosive atmospheres.

The PIUSI products have successfully obtained certification CESI and IECEx Certificate of Conformity.

TYPE OF FLUIDS

AIR	A
ANTIFREEZE	A
AdBlue® (UREA)	Ad
BIODIESEL	B
DIESEL	D
FOOD	F
GASOLINE	G
GREASE	RG
KEROSENE	K
OIL	O
WATER	W
WINDSCREEN	WS

The intellectual property of this catalogue is assigned to all countries. Translation, reproduction, electronic storage and full or partial adaption by any means (including micofilms and photocopies) of its contents, without prior written authorisation from PIUSI S.p.a., entails a violation of PIUSI S.P.A's copyrights and constitutes an act of unfair competition. The products shown in the images of this catalogue are protected according to the regulation in force regarding industrial property. The information contained in this catalogue is as accurate as possible and complies, as far as possible, with existing regulations at the time of its publication. We therefore reserve the right to make subsequent modifications in line with modifications to regulations and/ or in relation to any production requirements that are deemed necessary for safety reasons. The technical specifications indicated in this catalogue cancel out and replace those already present in the previous general catalogue and in the product catalogues. The updates and product data sheets are available in PDF format on our website:
www.piusi.com

CERTIFIED
UNI - EN ISO 9001
UNI - EN ISO 14001
UNI - ISO 45001

SINCE 1953, PIUSI HAS BEEN EMPLOYING ITALIAN ENGINEERING SKILLS AT THE SERVICE OF ITS CUSTOMERS, WITH PROFESSIONALISM AND INTEGRITY IN ORDER TO BUILD STABLE AND LASTING RELATIONSHIPS.

OUR MISSION IS TO PROVIDE SIMPLE, INTELLIGENT AND PROFESSIONAL SOLUTIONS FOR THE TRANSFER, DISPENSE AND MEASUREMENT OF LUBRICANTS, FUELS AND LIQUIDS, WITH THE HIGHEST CONSIDERATION FOR HUMAN AND ENVIRONMENTAL HEALTH.

PIUSI S.p.A.
Headquarters
46029 Suzzara (Mantova) Italy
tel.+39 0376 534561
fax.+39 0376 536393
e-mail: piusi@piusi.com
www.piusi.com

PIUSI USA, Inc.
3901 Anglers Avenue
Fort Lauderdale, FL 33312
tel.: 954 584 1552
fax.: 954 584 1554
Email: piusiusa@piusi.com
www.piusi.com/usa

Copyright PIUSI s.p.a. - Catalogue CO375A EN - 07.23

TECHNICAL DATA IN THE CATALOGUE ARE NOT BINDING. THE COMPANY RESERVES THE RIGHT TO MODIFY THE INFORMATION CONTAINED IN THIS CATALOGUE WITHOUT ANY PRIOR NOTICE.